

CASEMENT

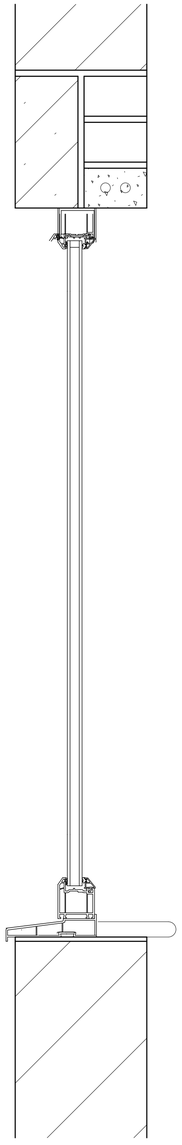

FIXED LIGHT

VERTICAL SECTIONS THROUGH WINDOWS

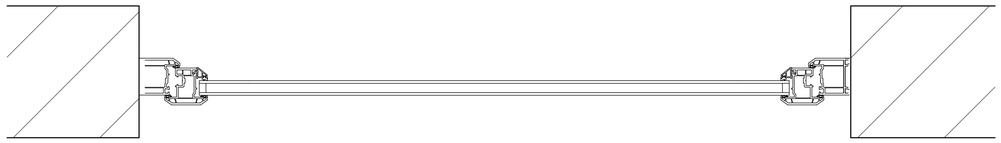

CASEMENT

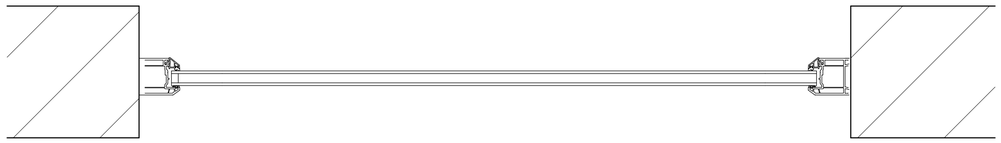

FIXED LIGHT

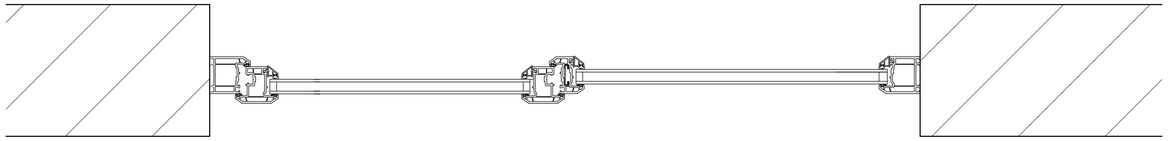

CASEMENT AND FIXED LIGHT

HORIZONTAL SECTION THROUGH WINDOWS

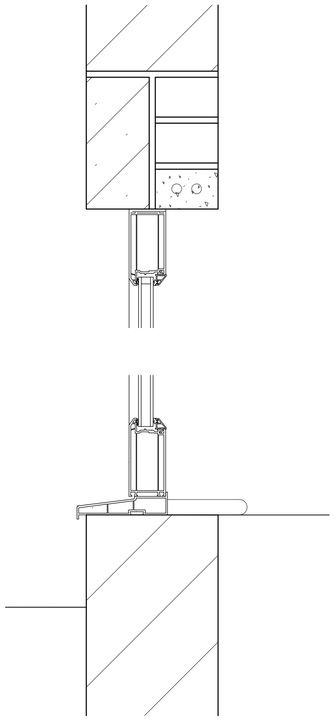

SECTION THROUGH DOORS

Windows and doors to be UPVC double glazed, oak finish externally and white finish internally.

All windows and doors to be side hung with proprietary hinges, stays and locking mechanisms.

All window and door frames to be set back a minimum of 75mm from the edge of the brickwork or stonework around the openings and therafter retained.

Rooflights to be Velux Conservation Reference GVT 154 0059S; 560 x 980mm

Gutters to be ‘Hepdrain’ 112mm half round gutters laid to 1 in 600 falls, with 68mm diameter rainwater pipes.

M. & S. BENNION

DATE NOVEMBER 2017

PROPOSED BARN CONVERSION FOR GRANNY FLAT AT
IPSTONES PARK FARM,
PARK LANE,
IPSTONES,
STOKE-ON-TRENT,
STAFFS. ST10 2NE

SCALE: 1:5

DRAWN BY:

MALCOLM SALES
QUANTITY SURVEYORS, DESIGNERS
& BUILDING COST CONSULTANTS
CURCHILL SUITE,
LULWORTH HOUSE,
51, HIGH STREET,
CHEADLE, STOKE-ON-TRENT,
STAFFS. ST10 1AR
TEL: 01538 757233
MOB: 07889 225437
E-MAIL: Malcolm.sales@salesqs.co.uk

WINDOW & DOOR DETAILS & NOTES IN RESPECT OF RAINEATER GOODS & ROOFLIGHTS

FOR DISCHARGE OF PLANNING CONDITIONS

DRAWING NR. 1612/14/05