

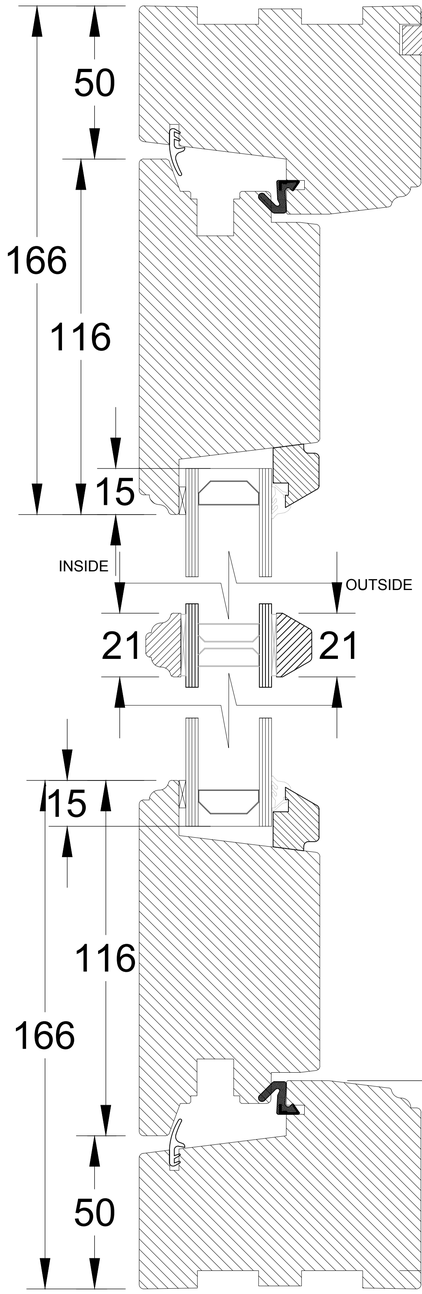

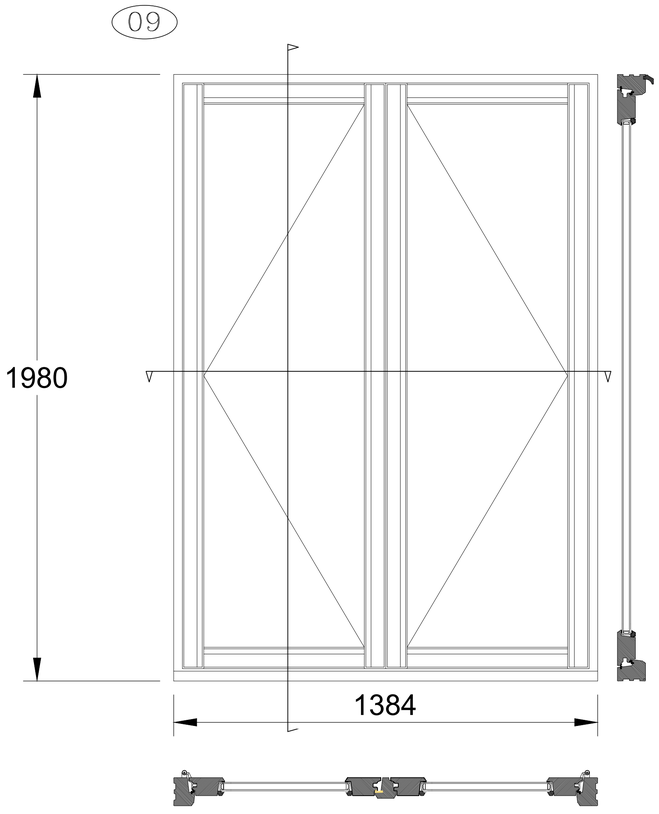

9) LngeFRNT Door-Amdega Softwood Timber French Doors
TF24, 1384 mm. wide x 1980 mm. high, B Dimension: 692, Door Handle Style: Modern, Door
Hinge Finish: Chrome, External Finish: Beige Grey, Feature Panel: 1, Furniture Finish: Chrome,
Glass Whole Frame: 4mm Clear, Hung: Left, Internal Finish: Beige Grey, Opening: Out, Profile
Style: Flush, Sealed Unit Type: Energy Saver Plus, Spacer Colour: Black

1. All dimensions in millimetres (mm) and levels in metres (m) unless noted otherwise.
2. This drawing to be read in conjunction with all other relevant drawings and specification.
3. All work to comply with the relevant British Standards, Codes of Practice and the Building Regulations.

Revisions:

Customer: Mr Marc Stevens
Shires Barn
Black Lane
Stoke-On-Trent, Staffordshire
ST10 2JQ

Drawing Title: Proposed Doors and Details

Drawing No: 1363/PP/06	Contract No: EG1363AW
Scale: 1:1/1:10	Starting Date: 23/08/2018
Drawn: V.Podkolzina / Size: A1	Revision: .
	Ref No: .

Scale: 1:1 (mm) 0 100 200 300
1:10 (mm) 0 1000 2000 3000

Fit the best Everest

EVEREST
CONSERVATORIES
EVEREST HOUSE
SOPERS ROAD
CUFFLEY
EN6 4SG

© Crown copyright. All rights reserved.
License numbers 010031673 and 100042205