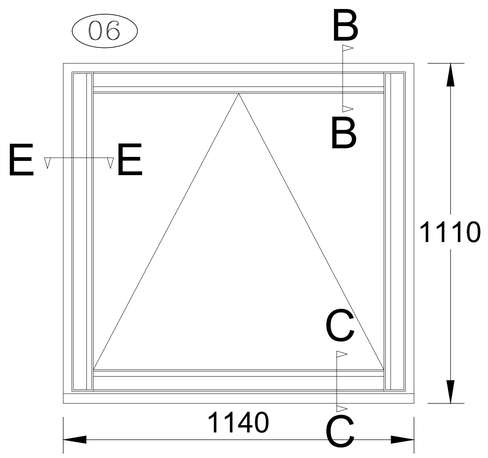

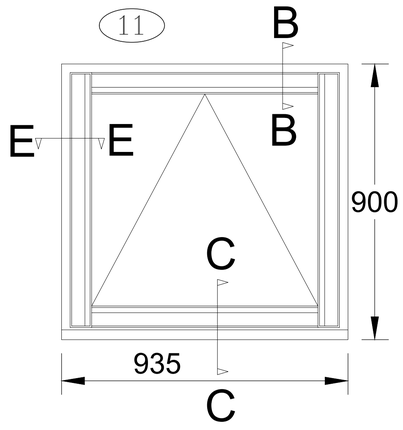

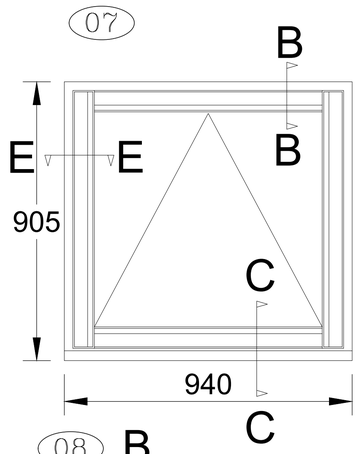

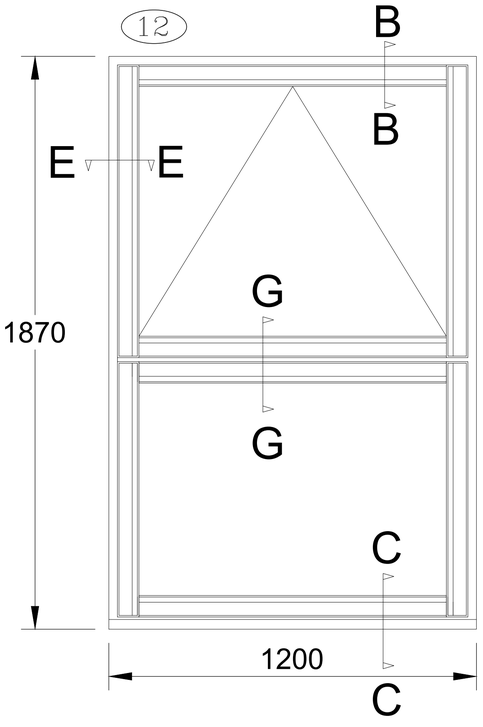

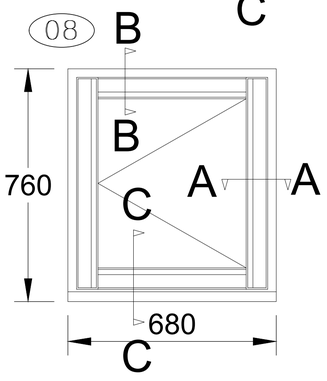

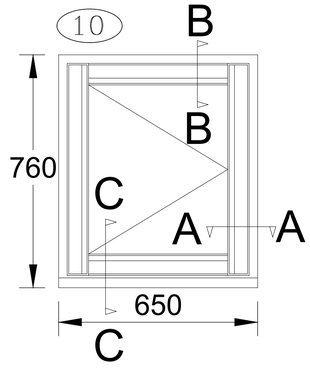

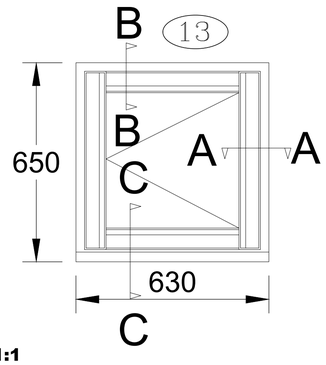



1) Gablebed Window-Amdega Softwood Timber Radius Win TR210, 1060 mm. wide x 1960 mm. high, External Finish: Beige Grey, Glass Whole Frame: 4mm Clear, Handle Finish: Chrome, Handle Style: Modern, Internal Finish: Beige Grey, Lock Type: Shootbolt, Restrictor Qty Right Handed: 1, Restrictor Type: Non-Locking, Sash Style: Flush, Sealed Unit Type: Energy Saver Plus, Spacer Colour: Black, Stay Type: Standard, Toughened Glass

2) Landing Window-Amdega Softwood Timber Casement Win
T1, 605 mm. wide x 870 mm. high, External Finish: Beige Grey, Glass Whole Frame: 4mm Clear, Handle Finish: Chrome, Handle Style: Modern, Internal Finish: Beige Grey, Lock Type: Shootbolt, Restrictor Qty Right Handed: 1, Restrictor Type: Non-Locking, Sash Style: Flush, Sealed Unit Type: Energy Saver Plus, Spacer Colour: Black, Stay Type: Standard, Toughened Glass

3) BckBed Window-Amdega Softwood Timber Casement Win
T3, 930 mm. wide x 885 mm. high, External Finish: Beige Grey, Glass Whole Frame: 4mm Clear, Handle Finish: Chrome, Handle Style: Modern, Internal Finish: Beige Grey, Lock Type: Shootbolt, Restrictor Qty Left Handed: 1, Restrictor Type: Non-Locking, Sash Style: Flush, Sealed Unit Type: Energy Saver Plus, Spacer Colour: Black

4) Ensuite Window-Amdega Softwood Timber Casement Win
T2, 510 mm. wide x 760 mm. high, External Finish: Beige Grey, Glass Whole Frame: Autumn, Handle Finish: Chrome, Handle Style: Modern, Internal Finish: Beige Grey, Lock Type: Shootbolt, Restrictor Qty Left Handed: 1, Restrictor Type: Non-Locking, Sash Style: Flush, Sealed Unit Type: Energy Saver Plus, Spacer Colour: Black, Stay Type: Standard, Toughened Glass

5) MastBed Window-Amdega Softwood Timber Casement Win
T3, 815 mm. wide x 1105 mm. high, External Finish: Beige Grey, Glass Whole Frame: 4mm Clear, Handle Finish: Chrome, Handle Style: Modern, Internal Finish: Beige Grey, Lock Type: Shootbolt, Restrictor Qty Left Handed: 1, Restrictor Type: Non-Locking, Sash Style: Flush, Sealed Unit Type: Energy Saver Plus, Spacer Colour: Black

6) Bed2 Window-Amdega Softwood Timber Casement Win
T3, 1140 mm. wide x 1110 mm. high, External Finish: Beige Grey, Glass Whole Frame: 4mm Clear, Handle Finish: Chrome, Handle Style: Modern, Internal Finish: Beige Grey, Lock Type: Shootbolt, Restrictor Qty Left Handed: 1, Restrictor Type: Non-Locking, Sash Style: Flush, Sealed Unit Type: Energy Saver Plus, Spacer Colour: Black

7) LngeBCK Window-Amdega Softwood Timber Casement Win
T3, 940 mm. wide x 905 mm. high, External Finish: Beige Grey, Glass Whole Frame: 4mm Clear, Handle Finish: Chrome, Handle Style: Modern, Internal Finish: Beige Grey, Lock Type: Shootbolt, Sash Style: Flush, Sealed Unit Type: Energy Saver Plus, Spacer Colour: Black

8) LngeFRNT Window-Amdega Softwood Timber Casement Win
T2, 680 mm. wide x 760 mm. high, External Finish: Beige Grey, Glass Whole Frame: 4mm Clear, Handle Finish: Chrome, Handle Style: Modern, Internal Finish: Beige Grey, Lock Type: Shootbolt, Sash Style: Flush, Sealed Unit Type: Energy Saver Plus, Spacer Colour: Black, Stay Type: Standard

10) DinFRNT Window-Amdega Softwood Timber Casement Win
T1, 650 mm. wide x 760 mm. high, External Finish: Beige Grey, Glass Whole Frame: 4mm Clear, Handle Finish: Chrome, Handle Style: Modern, Internal Finish: Beige Grey, Lock Type: Shootbolt, Sash Style: Flush, Sealed Unit Type: Energy Saver Plus, Spacer Colour: Black, Stay Type: Standard

11) DinBCK Window-Amdega Softwood Timber Casement Win
T3, 935 mm. wide x 900 mm. high, External Finish: Beige Grey, Glass Whole Frame: 4mm Clear, Handle Finish: Chrome, Handle Style: Modern, Internal Finish: Beige Grey, Lock Type: Shootbolt, Sash Style: Flush, Sealed Unit Type: Energy Saver Plus, Spacer Colour: Black

12) Kitchen Window-Amdega Softwood Timber Casement Win
T208, 1200 mm. wide x 1870 mm. high, 1st Transom: 1166, External Finish: Beige Grey, Glass Whole Frame: 4mm Clear, Handle Finish: Chrome, Handle Style: Modern, Internal Finish: Beige Grey, Lock Type: Shootbolt, Sash Style: Flush, Sealed Unit Type: Energy Saver Plus, Spacer Colour: Black, Toughened Glass

13) Utility Window-Amdega Softwood Timber Casement Win
T2, 630 mm. wide x 650 mm. high, External Finish: Beige Grey, Glass Whole Frame: 4mm Clear, Handle Finish: Chrome, Handle Style: Modern, Internal Finish: Beige Grey, Lock Type: Shootbolt, Sash Style: Flush, Sealed Unit Type: Energy Saver Plus, Spacer Colour: Black, Stay Type: Standard

1. All dimensions in millimetres (mm) and levels in metres (m) unless noted otherwise.
2. This drawing to be read in conjunction with all other relevant drawings and specification.
3. All work to comply with the relevant British Standards, Codes of Practice and the Building Regulations.

Revisions:

Customer:
Mr Marc Stevens
Shires Barn
Black Lane
Stoke-On-Trent, Staffordshire
ST10 2JQ

Drawing Title:
Proposed Windows and Details

Drawing No: 1363/PP/05	Contract No: EG1363AW
Scale: 1:1/1:10	Starting Date: 23/08/2018
Drawn: V.Podkolzina	Size: A1
	Revision: .
	Ref No: .

Fit the best Everest

EVEREST
CONSERVATORIES
EVEREST HOUSE
SOPERS ROAD
CUFFLEY
EN6 4SG

© Crown copyright. All rights reserved.
License numbers 010031673 and 100042205