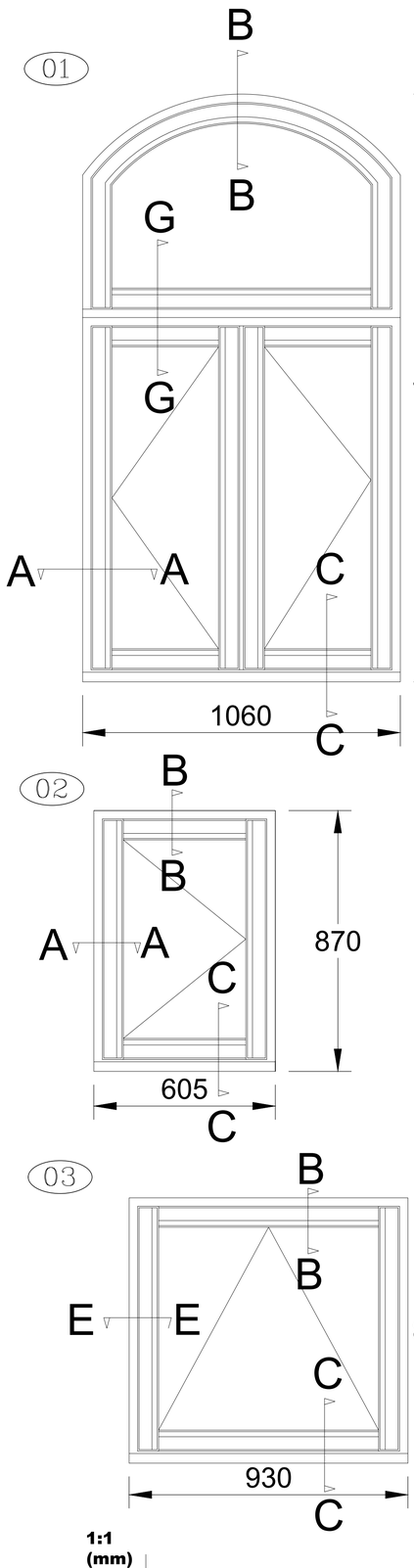

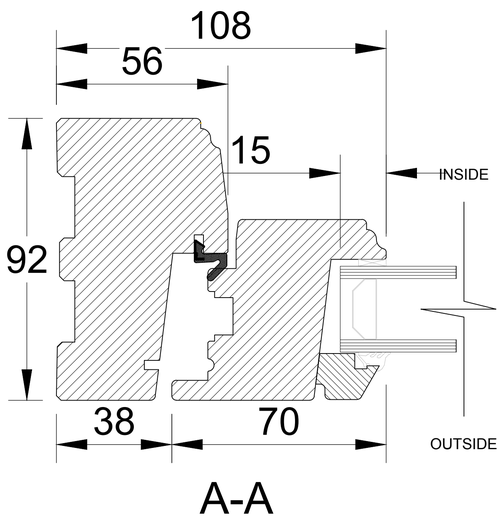

A-A

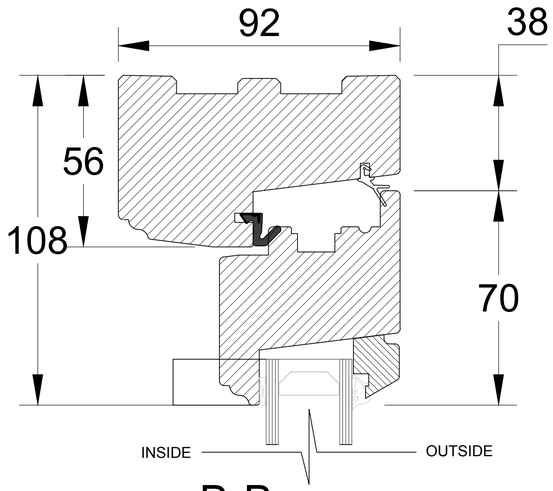

B-B

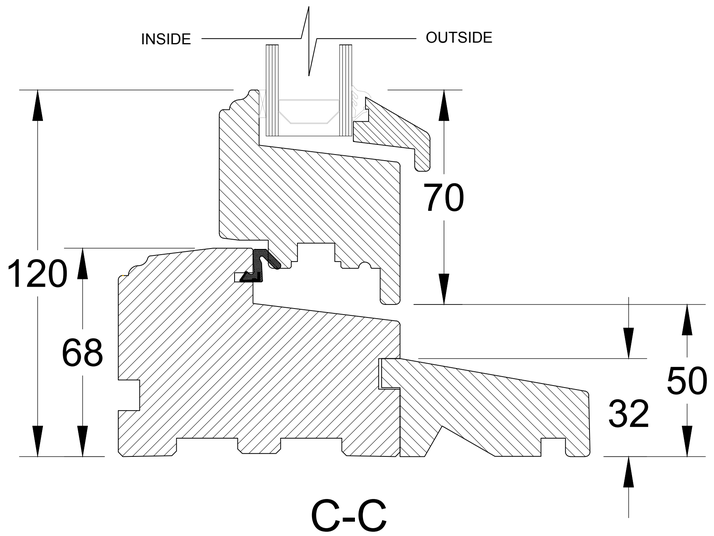

C-C

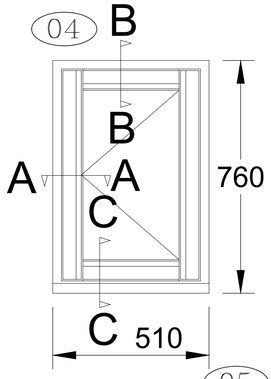

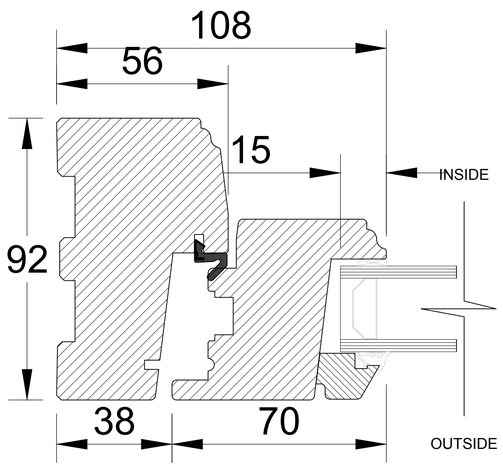

E-E

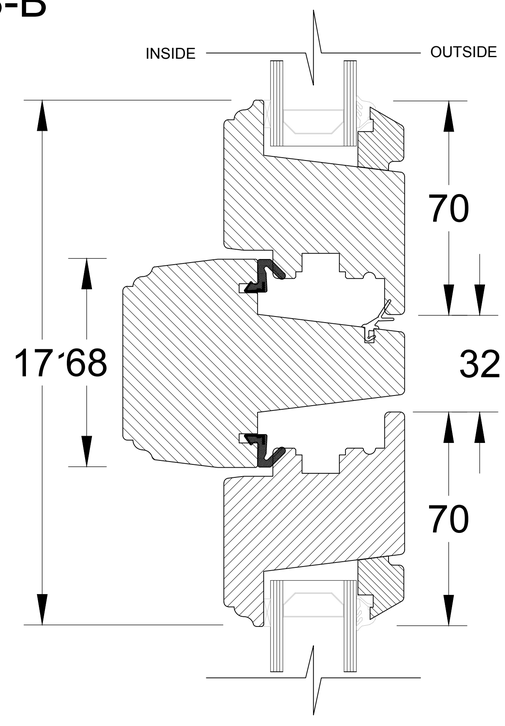

G-G

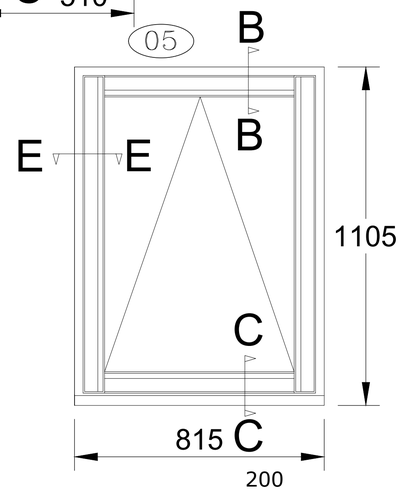



1. All dimensions in millimetres (mm) and levels in metres (m) unless noted otherwise.
2. This drawing to be read in conjunction with all other relevant drawings and specification.
3. All work to comply with the relevant British Standards, Codes of Practice and the Building Regulations.

Revisions:

Customer:
Mr Marc Stevens
Shires Barn
Black Lane
Stoke-On-Trent, Staffordshire
ST10 2JQ

Drawing Title:
Proposed Windows and Details

Drawing No: 1363/PP/04	Contract No: EG1363AW
Scale: 1:1/1:10	Starting Date: 23/08/2018
Drawn: V.Podkolzina	Size: A1
	Revision: .
	Ref No: .

Fit the best Everest

EVEREST
CONSERVATORIES
EVEREST HOUSE
SOPERS ROAD
CUFFLEY
EN6 4SG

© Crown copyright. All rights reserved.
License numbers 010031673 and 100042205