

VERTICAL SECTION

SCALE 1:10



HORIZONTAL SECTION

SCALE 1:10

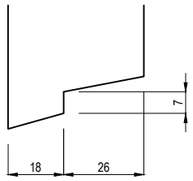

STEPPED BOTTOM RAIL

SCALE 1:2

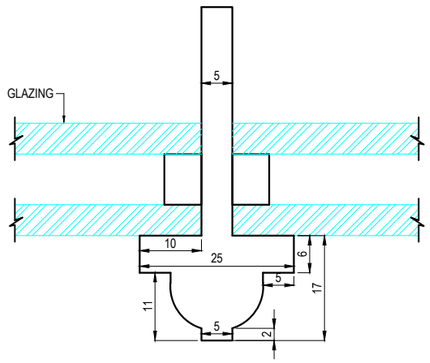

GLAZING BAR PROFILE

SCALE 1:1

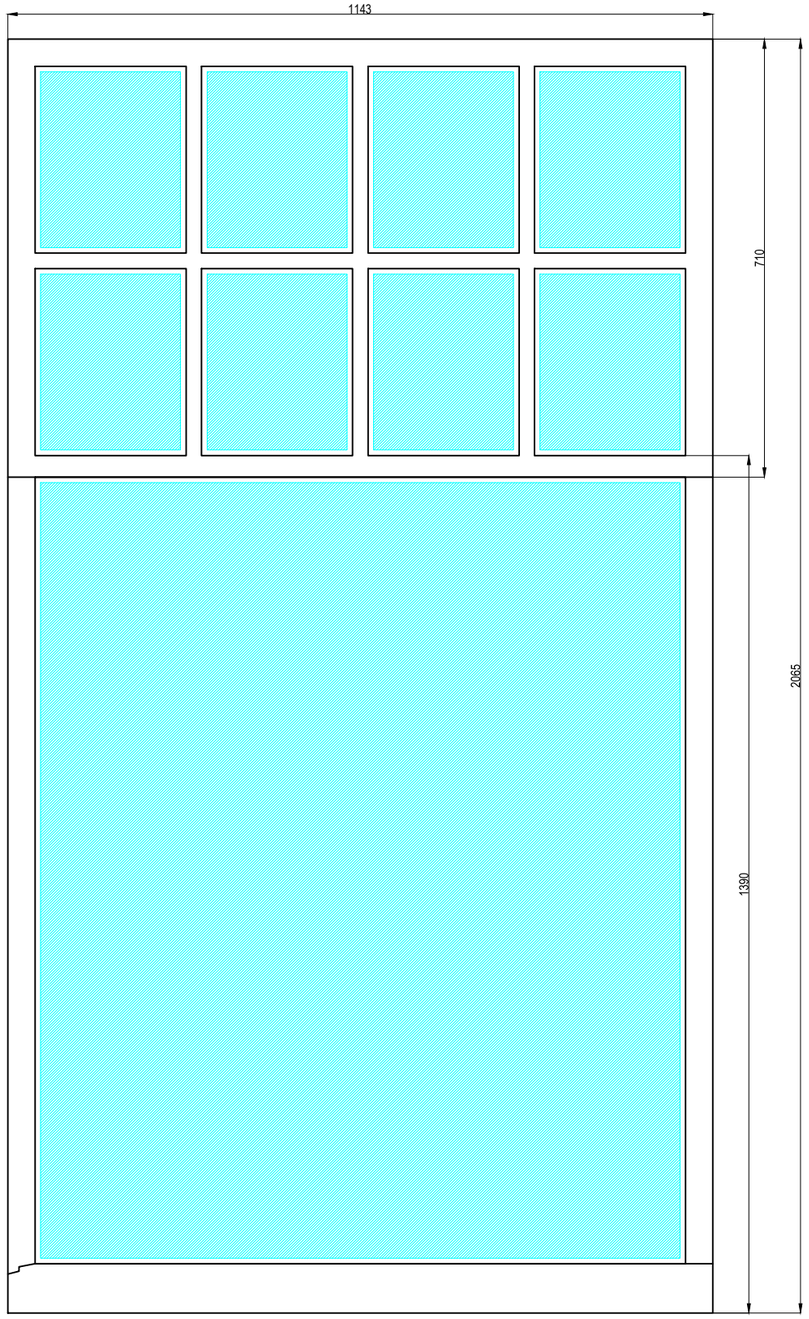

ELEVATION

SCALE 1:10

Rev.	Date	Drawn	Chk'd	Rev.	Date	Drawn	Chk'd	Rev.	Date	Drawn	Chk'd

Ventrolla® SASH WINDOW RENOVATION SPECIALISTS

DRAWING TITLE
ATHOW - ITEM 6 & 7

DRAWING NUMBER	SHEET No.	OF
VENT1762	1	1

DRAWN	CHECKED	APPROVED	DATE	DRAWING SIZE	REV
S.Mikkilineni	RCB	KM	23.06.18	A3	0