

VERTICAL SECTION

SCALE 1:10

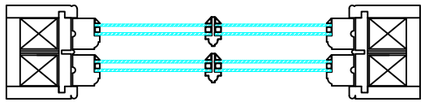

HORIZONTAL SECTION

SCALE 1:10

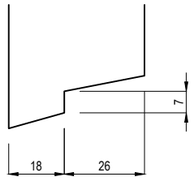

STEPPED BOTTOM RAIL

SCALE 1:2

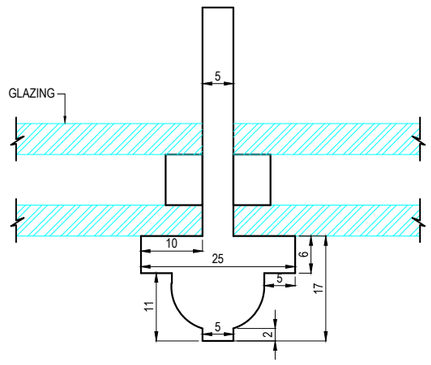

GLAZING BAR PROFILE

SCALE 1:1

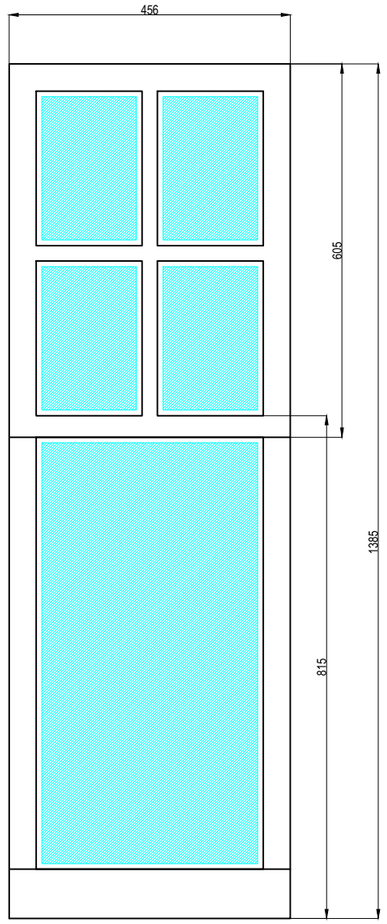

ELEVATION

SCALE 1:10

Rev.	Date	Drawn	Chk'd	Rev.	Date	Drawn	Chk'd	Rev.	Date	Drawn	Chk'd

Ventrolla®
SASH WINDOW RENOVATION SPECIALISTS

DRAWING TITLE
ATHOW - ITEM 5 & 8

DRAWING NUMBER				SHEET No.	OF
VENT1761				1	1
DRAWN	CHECKED	APPROVED	DATE	DRAWING SIZE	REV
S.Mikkilineni	RCB	KM	23.06.18	A3	0