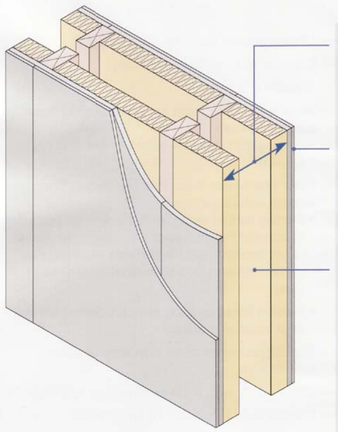

Wall width	240mm (min) between inner faces of wall linings. 50mm (min) gap between studs (must not be bridged by any diagonal bracing)
Wall lining	- 2 or more layers of gypsum-based board (total nominal mass per unit area 22 kg/m²), both sides - all joints staggered
Absorbent material	60mm (min) mineral wool batts or quilt (density 10 – 60 kg/m³) both sides. Material may be unfaced, paper faced or wire-reinforced
Ties	Ties between frames not more than 40mm x 3mm, at 1200mm (min) centres horizontally, one row of ties per storey height

SEPARATING WALL DETAIL E-WT-1

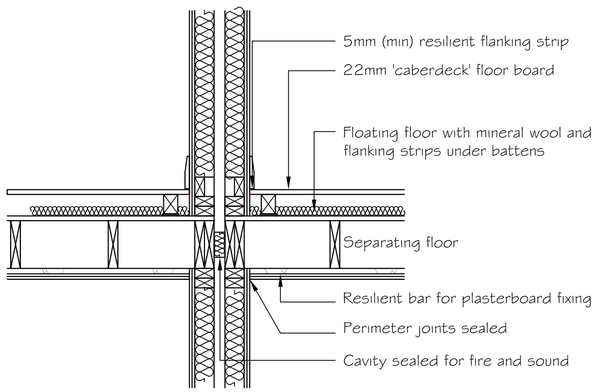

SEPARATING FLOOR DETAIL E-FT-1

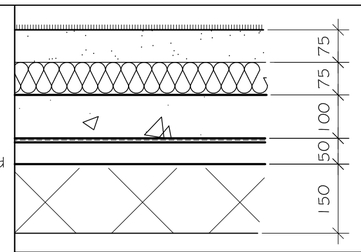

GROUND FLOOR DETAIL

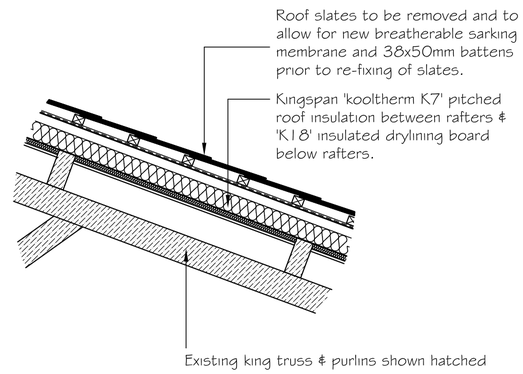

ROOF DETAIL A

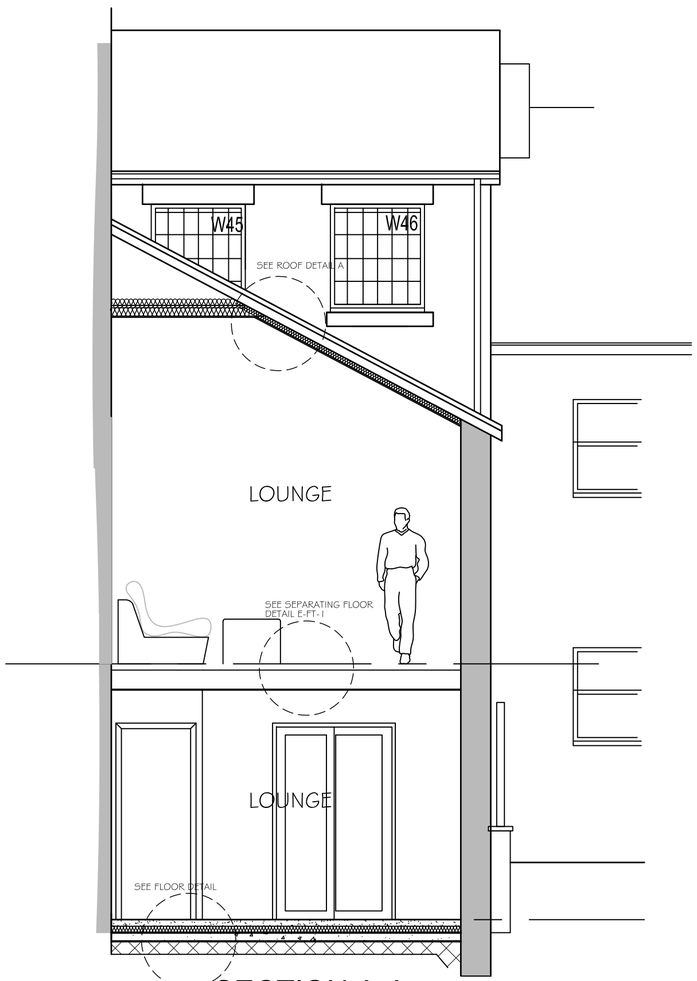

SECTION A-A

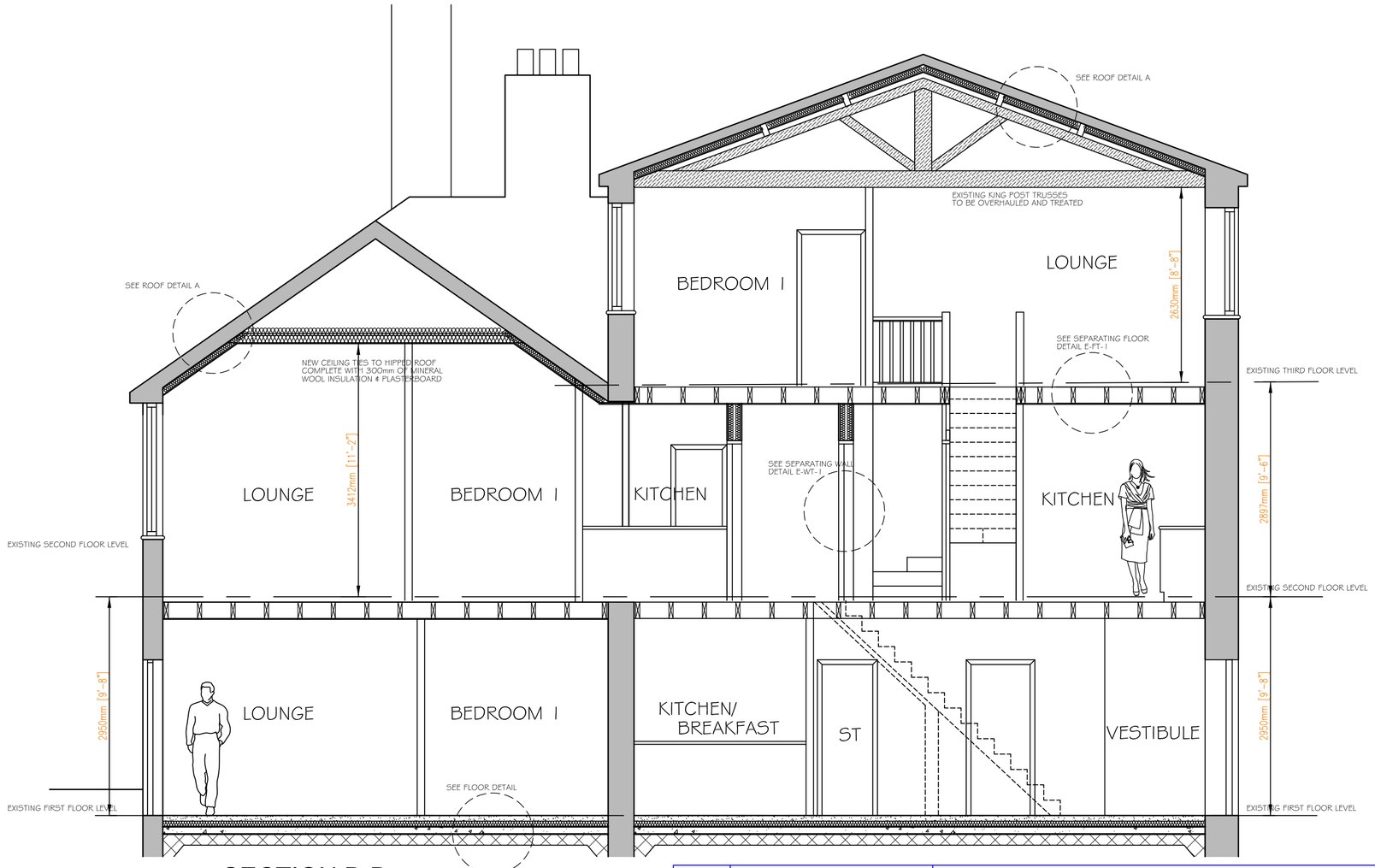

SECTION B-B

REV	DATE	DESCRIPTION
A	27/06/10	Rooflight omitted

APPLICANT	TITLE:	ADDRESS:	SCALE:	PLAN DETAILS:	SHEET REF:
MR. G McKAY	SKETCH LAYOUT 2 SECTIONS	PROPOSED CONVERSION & ALTERATIONS TO FORM 3No. SELF CONTAINED FLATS OVER 3 FLOORS AT SHOOBRIDGE MILL, SHOOBRIDGE STREET, LEEK.	1:50		SHEET 1 OF 1
			DATE: April '10	PLAN REF: SK1048/08 rev: A	