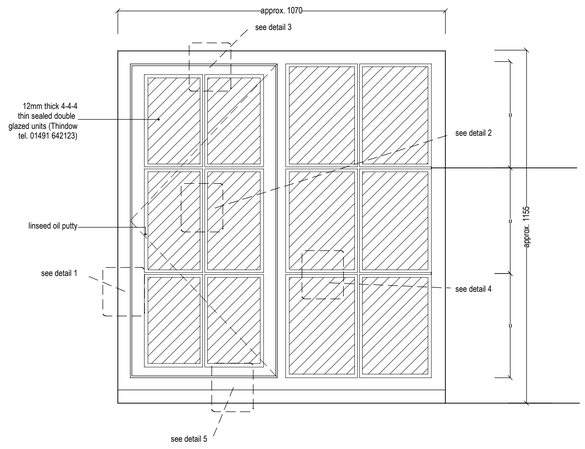

ELEVATION
Typical casement window 1:10

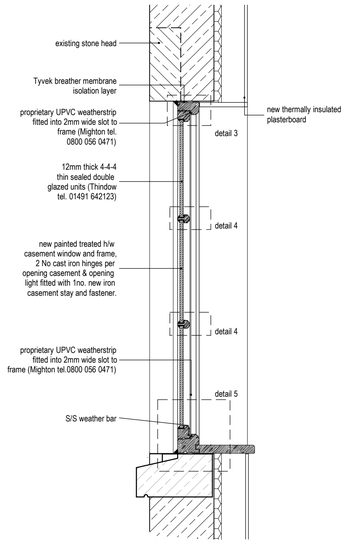

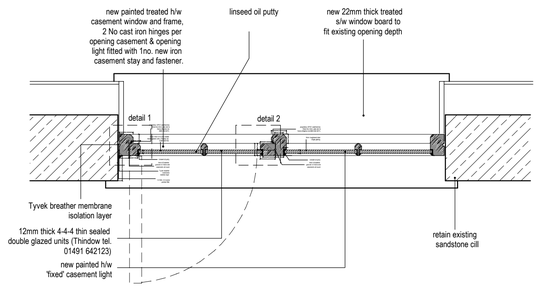

PLAN
Typical replacement casement window 1:10

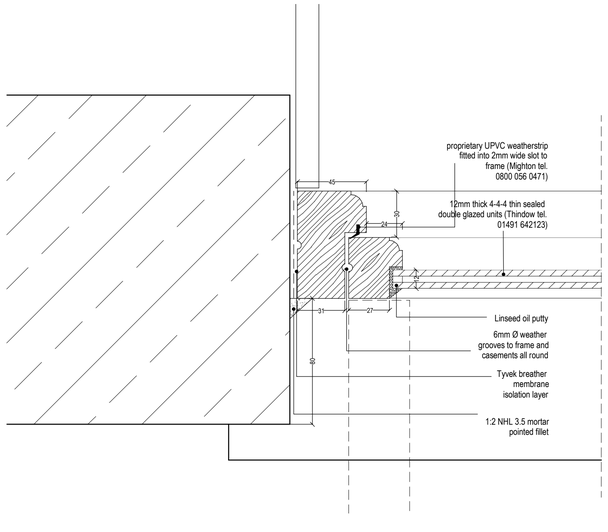

DETAIL 1
Typical Jamb detail 1:2

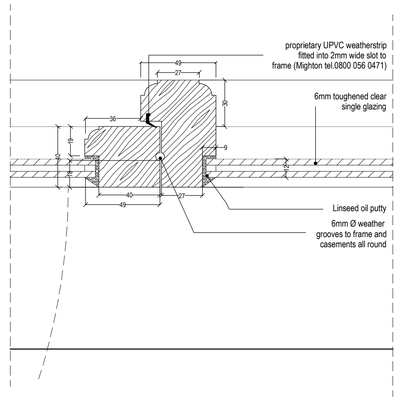

DETAIL 2
Typical mullion detail 1:2

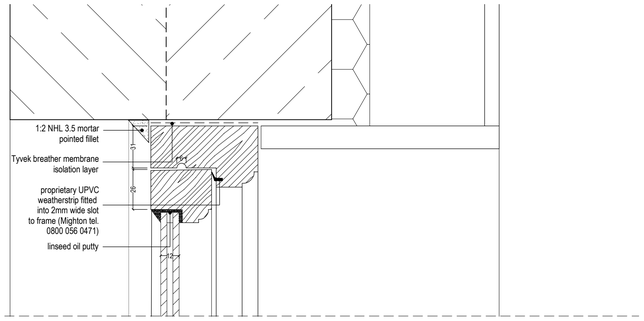

DETAIL 3
Typical head detail 1:2

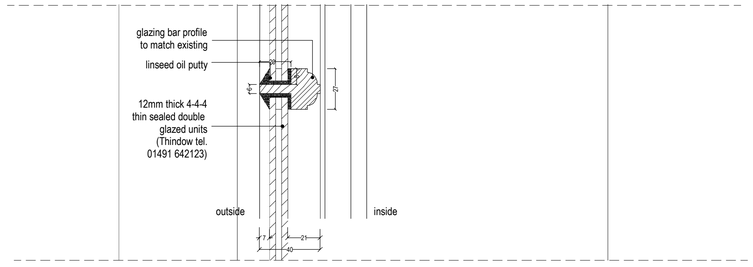

DETAIL 4
Typical glazing bar detail 1:2

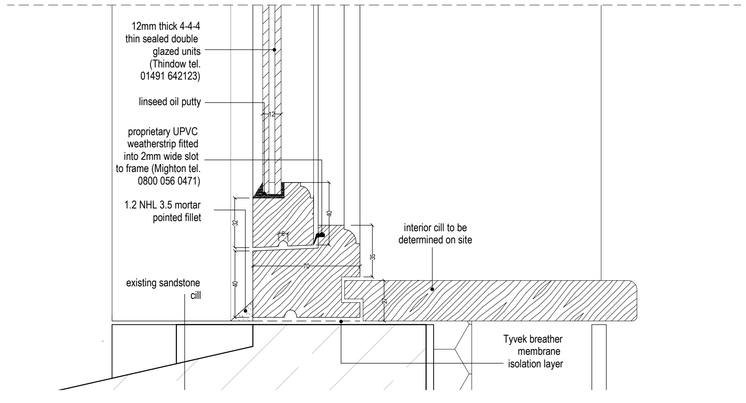

DETAIL 5
Typical cill detail 1:2

Rev	Date	Drawn	Description
-	-	-	-

ctd architects

Clerk Bank House
Clerk Bank
LEEK
Staffordshire
ST13 5HE
t : 01538 373477
f : 01538 386503
e : info@ctdarchitects.co.uk
w : www.ctdarchitects.co.uk

ctd architects © 2018
• This drawing is copyright.
• All dimensions to be checked on site before proceeding.
• Contractor must notify the architect of any discrepancies before proceeding.
• Contractor to check/adjust dimensions of new work to suit existing conditions. Do not assume existing structure or details are plumb, square or level.
• All drawings to be read in conjunction with all other consultants drawings and specs.

Client: Ogilvy & Sneyd

Project: The Stables, Basford Hall
BASFORD HALL ROAD, BASFORD, CHEDDLETON

Title: Typical Timber Casement Window Detail 'as proposed'

Scale	Size	Drawn	Chk'd	Date
1:10, 1:2	A1	SE	CH	28.03.2018

Status: PLANNING / LISTED BUILDING CONSENT

Job No.	Drawing No.	Rev.
1769	AL11	-