Copyright of this drawing is vested in the Architect and it must not be copied or reproduced without consent. Figured dimensions only are to be taken from this drawing. All contractors must visit the site and be responsible for taking and checking all dimensions relative to their work. Hewitt&Carr Architects Ltd are to be advised of any variation between drawings and site conditions.
CLIENTS ARE ADVISED TO CLARIFY DIMENSIONS WITH THE ARCHITECT PRIOR TO SETTING OUT AND NOT TO SCALE FROM THE DRAWING

Rev.	Drawn	Comments	Date

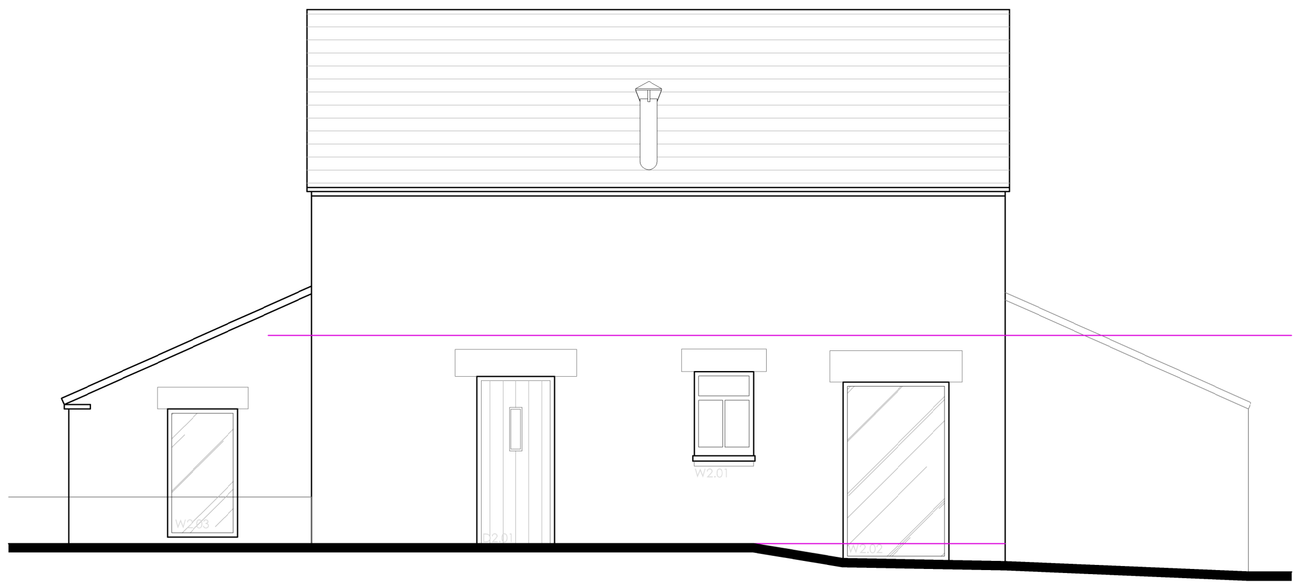

FRONT ELEVATION 1:50

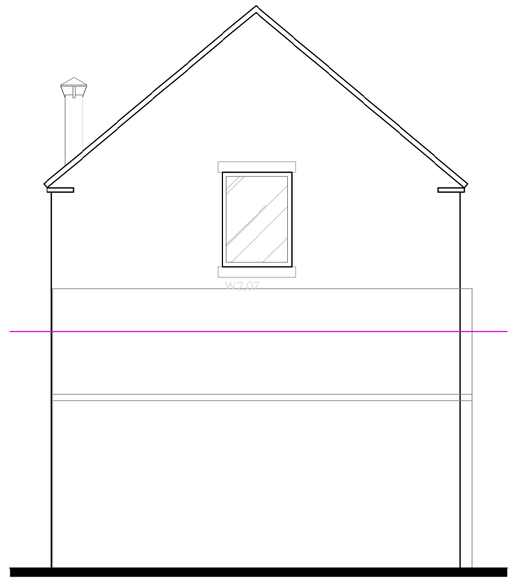

SIDE ELEVATION 1:50

This Drawing to be read in conjuction with drawing 00225 - AC(3)01

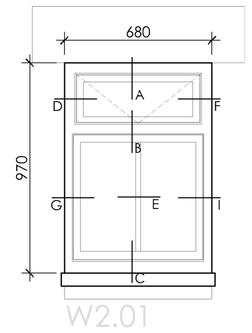

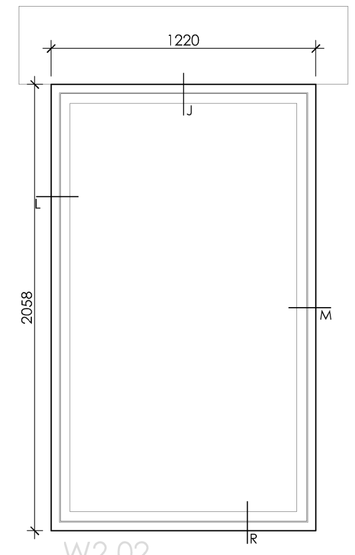

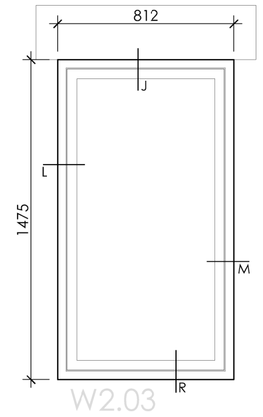

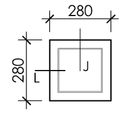

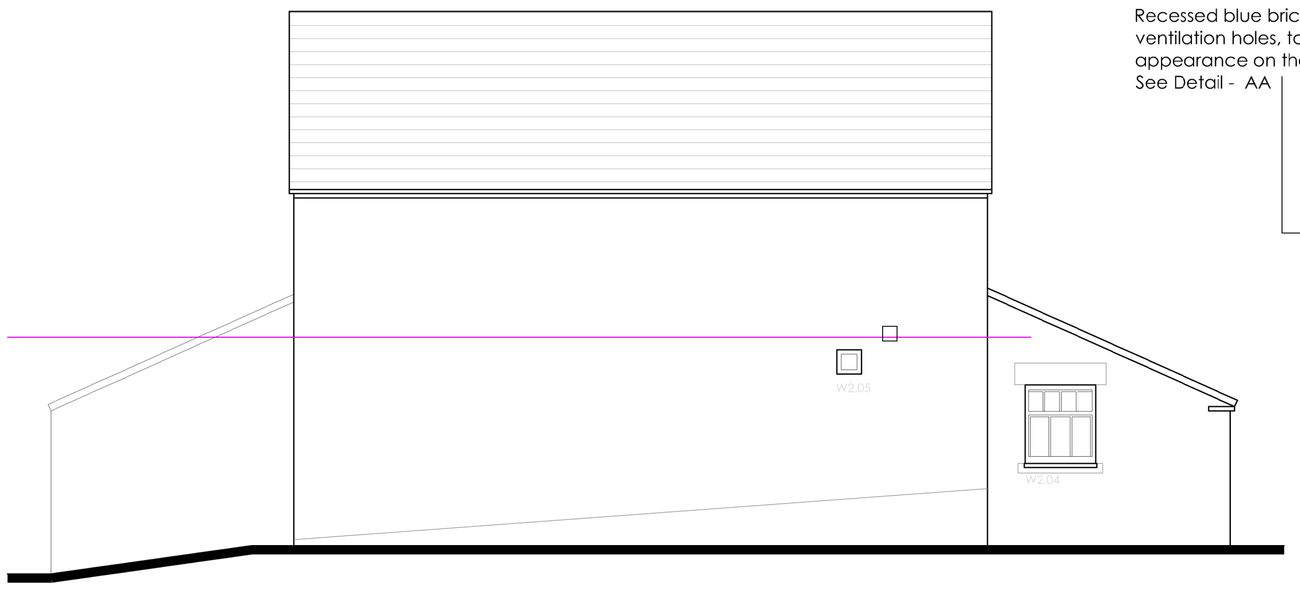

REAR ELEVATION 1:50

Recessed blue brick infill set within the ventilation holes, to maintain appearance on the elevation.
See Detail - AA

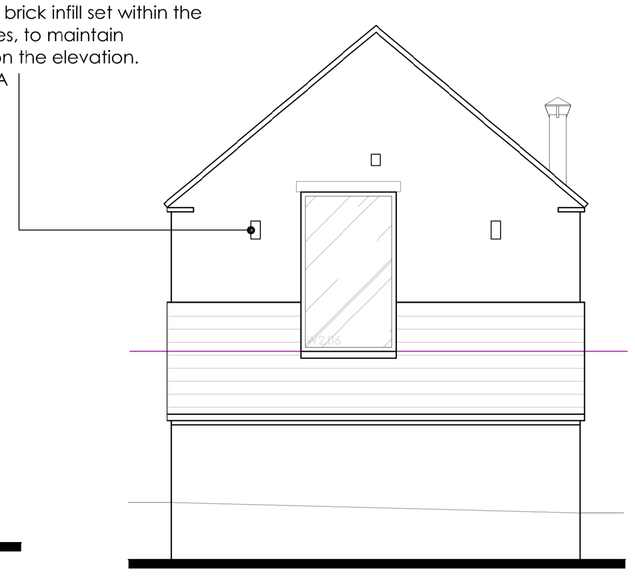

SIDE ELEVATION 1:50

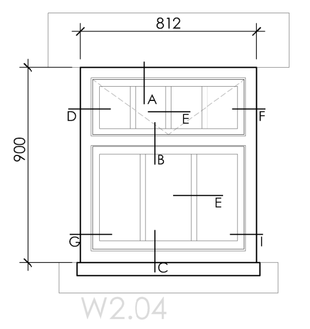

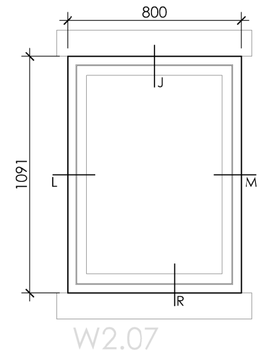

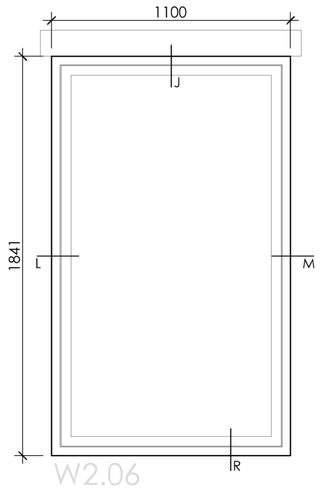

WINDOW ELEVATIONS 1:20

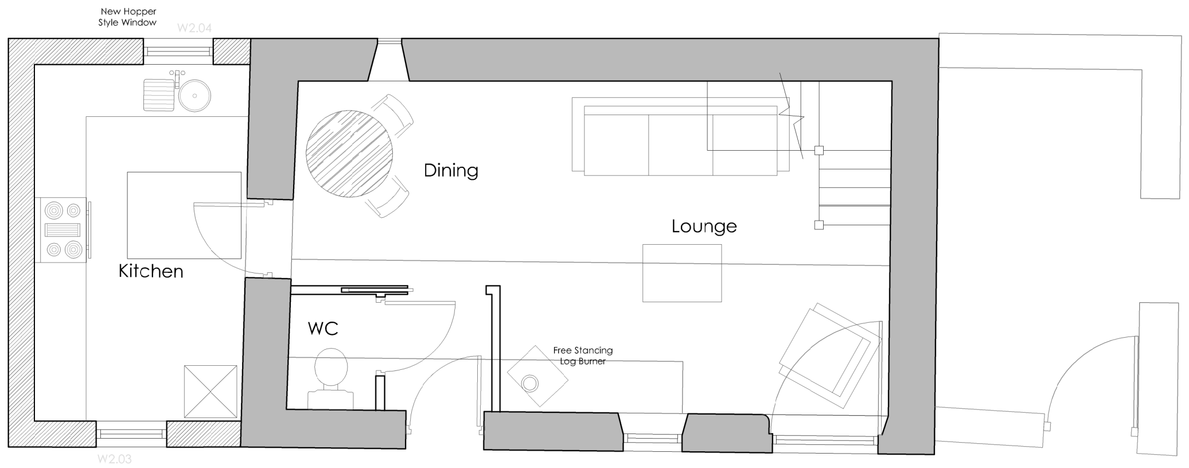

GROUND FLOOR PLAN 1:50

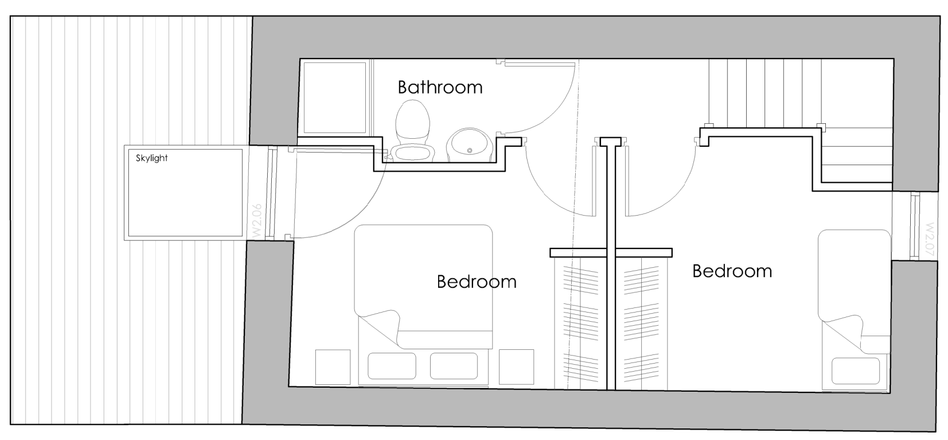

FIRST FLOOR PLAN 1:50

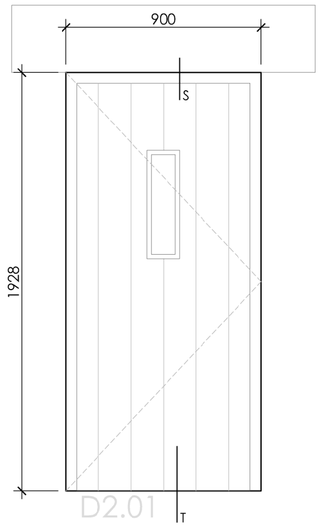

DOOR ELEVATION 1:20

Hewitt&Carr Architects
A: 2-4 Cross Street I Cheadle I Staffordshire I ST10 1NP
T: 01538 756888
E: enquiries@hcarchitects.co.uk
W: www.hcarchitects.co.uk

Client
Mr H Wainscott

Project
Proposed Conversion of Barns to Residential Accommodation
Red Morley Farm, Winkhill, Staffs

Title
Barn 2 as Proposed
Plans & Elevations as Proposed
Windows & Ventilation Holes

Status
Planning

PLANNING

Date July 18
Drawn KEW
Scale @A1 As Stated
Checked

Project No 00225
Drawing No. AL(0)21
Rev

File Ref: H:\REF