Scale (mm)

100 300 500 700 900 2000
0 200 400 600 800 1000 3000

Area Layout- Plan View



Worrall- Proposed Staircase Layout-2- 06.02.18

Diamond Pattern 1448mm diameter
Floor to Floor- 2980mm
14 rises @ 212.9mm
26 degree tread angle
3 x 25mm balusters per tread
Specailly fabricated landing (14) 6000mm x 1500mm
using 18 x 1000mm x 500mm Plates
Specailly fabricated 60 degree landing extension (14)
9.3 metres of matching landing balustrade- 1100mm high
Pole and bottom tread extensions- 100mm
No onsite welding included
Powder coating colour- TBC

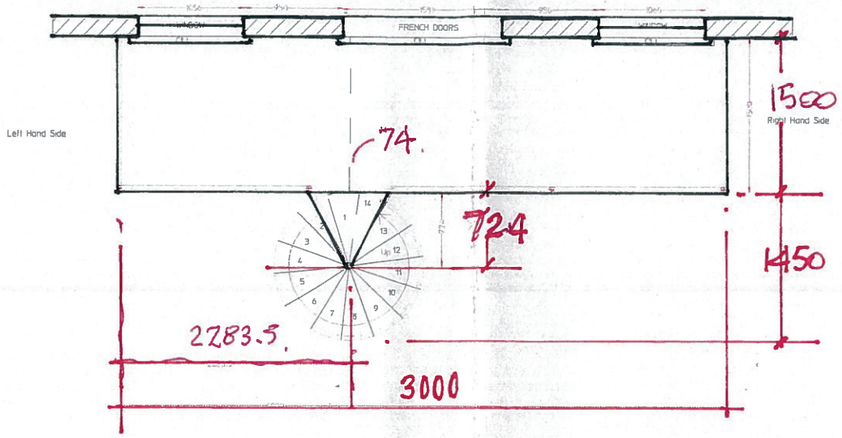

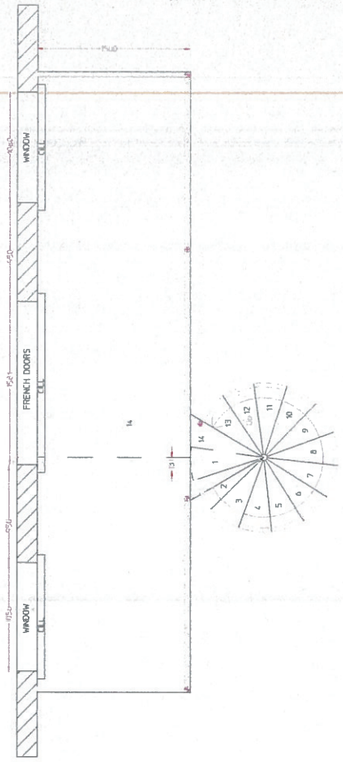

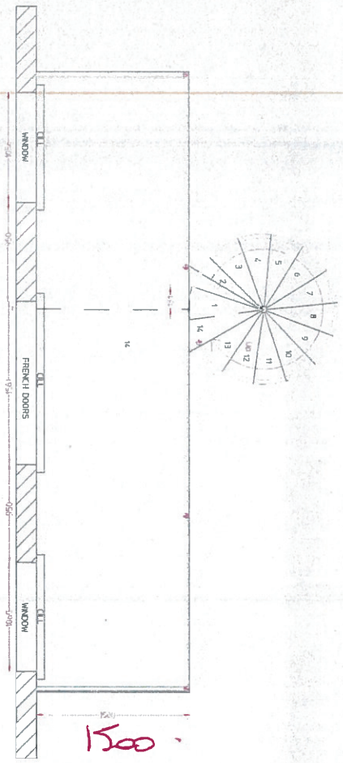

Area Layout- Front Elevation

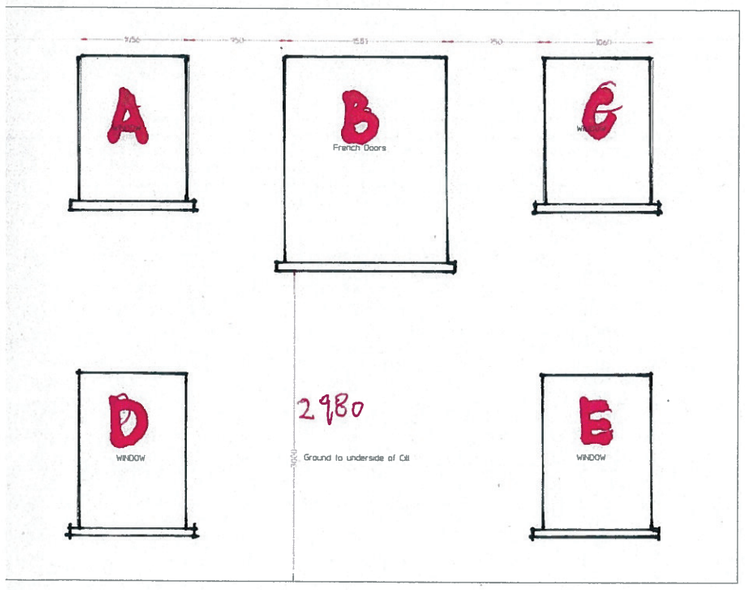

Front Eelvation

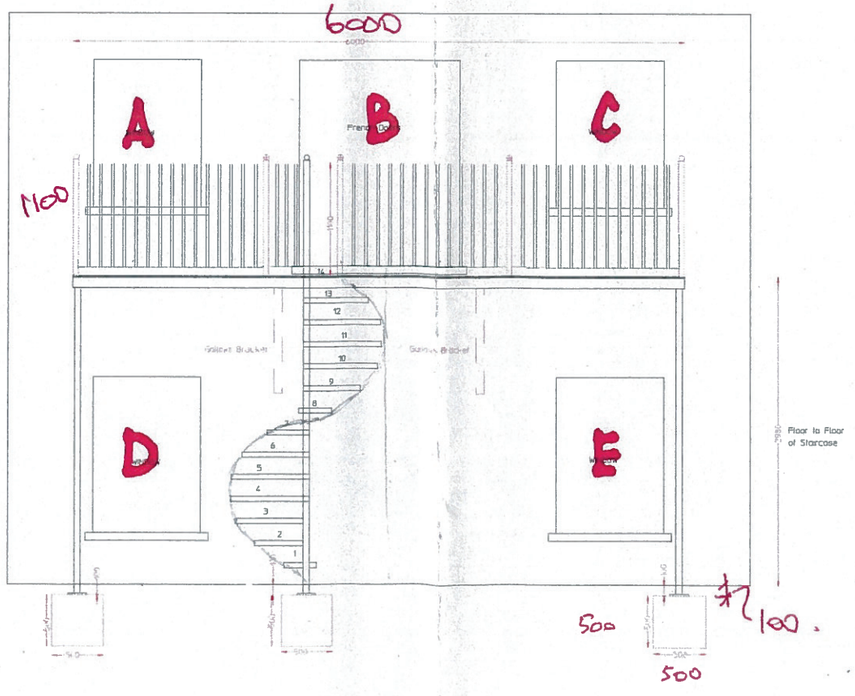

Left Side Elevation

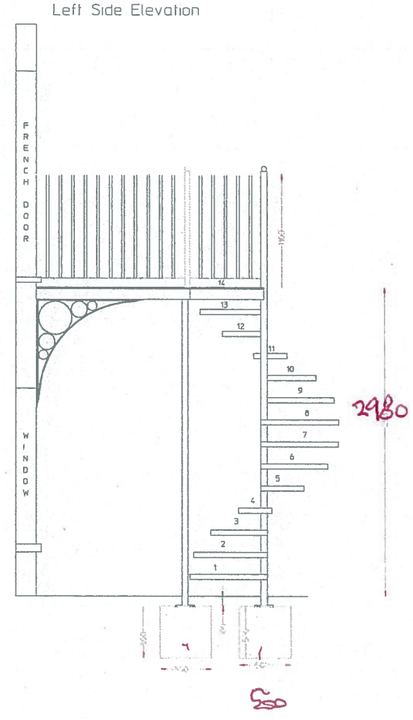

Right Side Elevation

