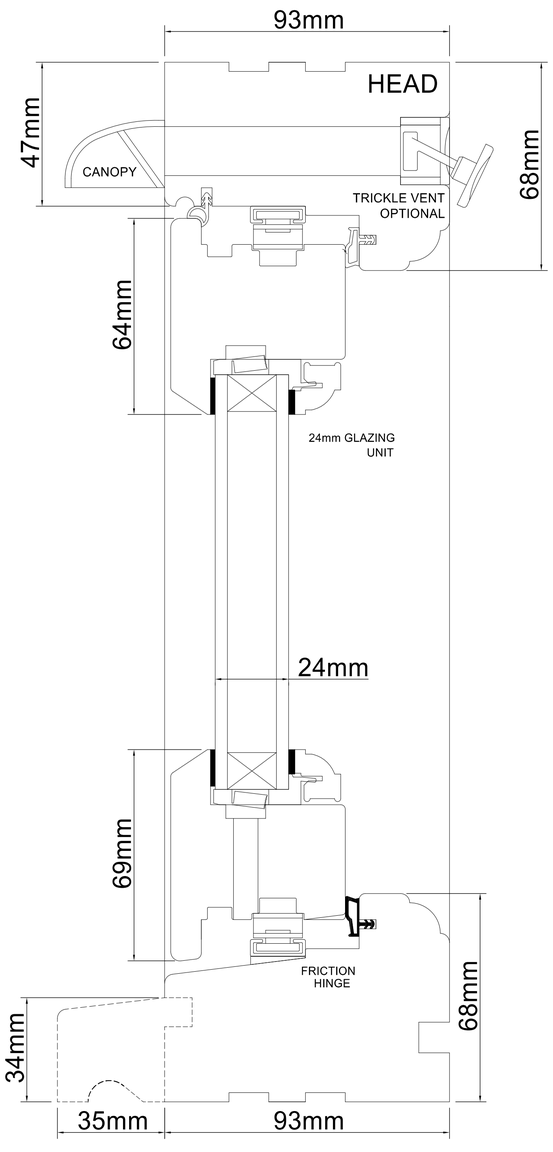

VERTICAL SECTION
THROUGH WINDOWS

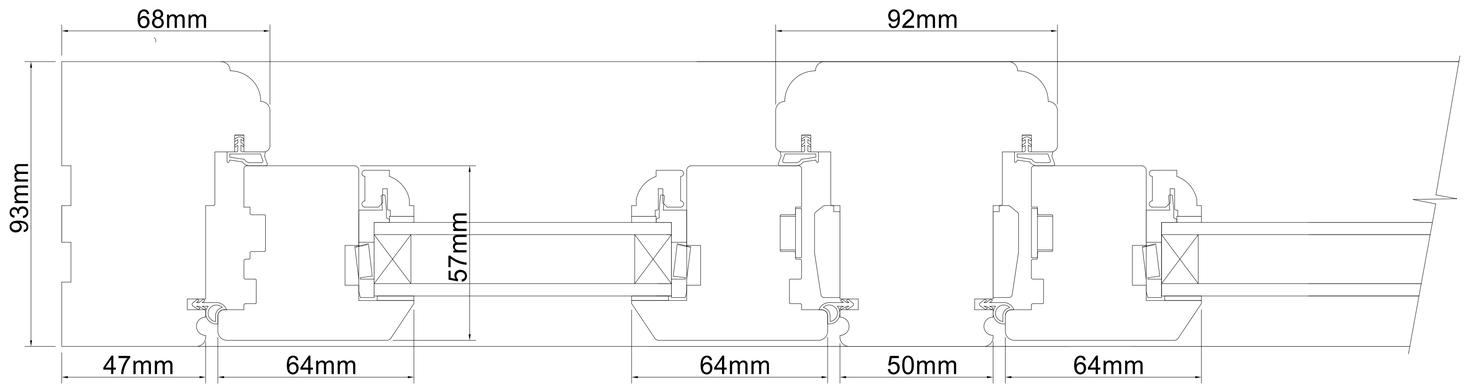

JAMB

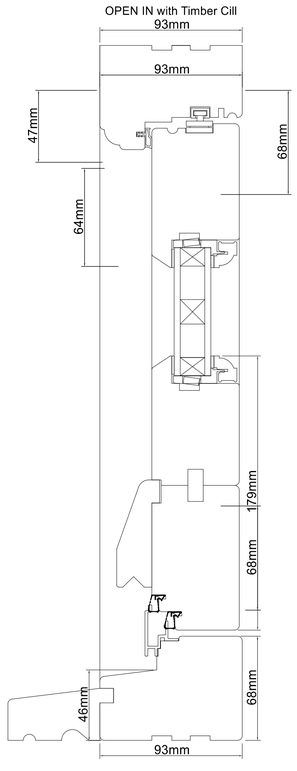

VERTICAL SECTION
THROUGH DOORS

HORIZONTAL SECTION THROUGH WINDOWS



JAMB

HORIZONTAL SECTION THROUGH DOORS

MR. R. GINDERS

DATE JUNE 2018

PROPOSED NEW DWELLING

AT
SOUTHERN LODGE,
4, LEEK ROAD,
CHEADLE,
STOKE-ON-TRENT,
STAFFS. ST10 1JF

SCALE:
DETAILS 1:1

DRAWN BY:

MALCOLM SALES
QUANTITY SURVEYORS, DESIGNERS
& BUILDING COST CONSULTANTS
CURCHILL SUITE,
LULWORTH HOUSE,
51, HIGH STREET,
CHEADLE, STOKE-ON-TRENT,
STAFFS. ST10 1AR
TEL: 01538 757233
MOB: 07889 225437
E-MAIL: Malcolm.sales@salesqs.co.uk

AS PROPOSED

FOR DISCHARGE OF
PLANNING CONDITIONS

DRAWING NR. 1710/01/04