TALEXchain P511-IP67 CRYSTAL

Dimensions single module:

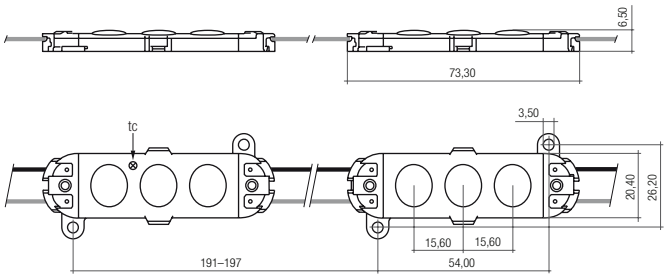



Applications:
- LED module chain for highlighting lines and edges and for backlighting letters and symbols in illuminated advertising applications
- backlighting of complex contours
- optimised for use in illuminated advertising (channel letters, backlighting applications) were a higher ingress protection is necessary

Highlights:
- uniform illumination from a small number of TALEX modules
- individually adjustable luminance
- angle of radiation 155°
- roll packaging
- LED module with plastic housing and strain relief with ingress protection of IP67

Properties:
- high-power LED in COB technology
- integrated current source to stabilise luminous flux
- flexible light chain, arbitrary module separation possible
- ingress protection IP67
- fixing: M4 metal screw or double sided adhesive tape pre-mounted
- connection method: cable 200 mm, both sides
- identification of polarity: + red / – black

Notes:
- for uniform illumination: minimum distance to the cover 50–60 mm
- reversing the polarity may damage the TALEXchain!
- for further information on installation please refer to the brochure entitled "TALEX installation instructions"
- it is possible to chain a maximum of 30 modules (green: 15 modules)

TALEX

type	article number	colour	colour temp. / wave length ④	light points per module	modules per roll	typ. luminous flux per roll lm ①	voltage V DC ②	power per roll W ①	ta °C	tc point °C ③	total length per roll	packing unit rolls per box
P511-IP67 G	89600808	green	525–540 nm	3	8 x 15	8 x 180	12	8 x 7.2	-25 → +55	65	approx. 8 x 3 m	18
P511-IP67 B	89600809	blue	458–463 nm	3	4 x 30	4 x 96	12	4 x 14.4	-25 → +55	65	approx. 4 x 6 m	18
P511-IP67 R	89600810	red	626–636 nm	3	4 x 30	4 x 264	12	4 x 14.4	-25 → +55	65	approx. 4 x 6 m	18
P511-IP67 A	89600811	amber	584–594 nm	3	4 x 30	4 x 480	12	4 x 14.4	-25 → +55	65	approx. 4 x 6 m	18
P511-IP67 O	89600812	orange	600–610 nm	3	4 x 30	4 x 510	12	4 x 14.4	-25 → +55	65	approx. 4 x 6 m	18
P511-IP67 CW	89600813	crystal white	6,500 K	3	4 x 30	4 x 720	12	4 x 14.4	-25 → +55	65	approx. 4 x 6 m	18

all values at ta = 25 °C

① Tolerance range for optical and electrical data: ±15 %

② Exceeding the maximum operating voltage leads to an overload on the TALEXchain. This may in turn result in a significant reduction in lifetime or even destruction of the TALEXchain. Tolerance range for the supply voltage: 12 V: +2 V / -0 V

③ If the maximum temperature limits are exceeded, the life of the module will be greatly reduced or the module may be damaged. The temperature of the TALEXchain at the tc point in the thermally stable state by means of a temperature sensor or temperature-sensitive sticker (available for example from www.conrad.com, www.rs-components.com) as per EN60598-1. For the precise position of the tc point see the above diagram.

④ For colour temperatures and tolerances see page 2.

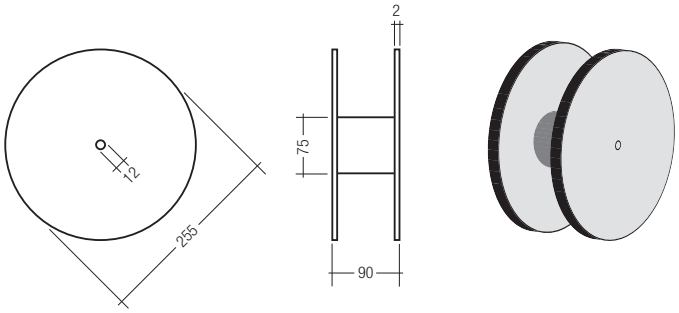

Dimensions roll packaging (total weight 1 kg)

TRIDONIC.ATCO

TALEXchain P511-IP67 CRYSTAL

Light distribution:

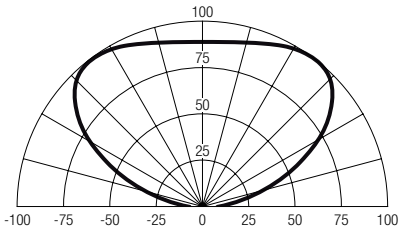

Coordinates and tolerances according to CIE 1964:

CIE coordinates:

crystal white

	x0	y0
centre	0.3200	0.3270

MacAdam ellipse: 5SDCM

crystal white

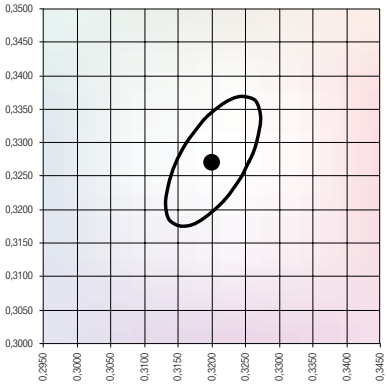

TRIDONIC.ATCO