V41706

# VC Series



## Volume Control Dampers

- Roll formed steel blades with three material options
- DW144 compliant
- Flanged models with 65mm deep mechanically fixed casings
- Rectangular spigotted models with 85mm fully welded case
- Circular spigotted models with 70mm fully welded case
- Suitable for vertical and horizontal ducted systems.

MANUFACTURERS OF AIR, FIRE AND SMOKE CONTROL PRODUCTS

# VC Series

## Volume Control Dampers – Product Description and Features



### Introduction

Designed primarily to balance airflows in low to medium velocity H&V systems, the VC Series Volume Control Damper can also be used to perform actuated control functions where low closed blade leakage is not a requirement. Flanged models have mechanically fixed 65mm deep casings, providing a robust, lightweight construction.

### Features

- Galvanised mild steel casing as standard
- 50mm wide roll formed galvanised or stainless steel blades
- Opposed blade action as standard with parallel action available on request
- Four casing options
- VC Series dampers can be installed in the vertical or horizontal position.
- Steel linkage located out of the airflow
- Sizing capability in 1mm increments; 100mm square/rectangular to 1000mm square/rectangular and from 100mm diameter to 1000mm diameter
- Flanged models with 65mm deep mechanically fixed casings and 30mm flanges with universal corner fixing slots
- Rectangular spigotted models with 85mm fully welded case
- Circular spigotted models with 70mm fully welded case
- Nylon spindles running in extruded punch formed bearings
- Comprehensive control options.
- Flanged Clinch corner providing a strong jointing system without the need for welding.
- Weldless flanged case joints provide a smooth surface each side of the damper that allows connecting ductwork systems to achieve high performance seals for the designed ducting pressure class.
- Circular spigot cased models are fully welded
- Clinch blade system provides smooth lines that minimises air turbulence and low generated noise.
- The drive linkage system provides low friction blade operation
- Fitted cover on drive side ensures migrating dust and dirt is eliminated from the blade bearings and drive mechanism, whilst still allowing ducting cleats to be used.
- Non drive side has sealed nylon bushes
- For non-standard '50mm' heights + 10mm to 49mm, a bottom landing angle will be fitted

### Blade Details

The 50mm wide roll formed mild steel galvanised or stainless steel blades (430 and 316L stainless steel) are fitted with composite end caps and 12.5mm diameter nylon spindles.

All models are available with opposed blade action as standard, with parallel blade action available on request.

Roll formed steel blade section

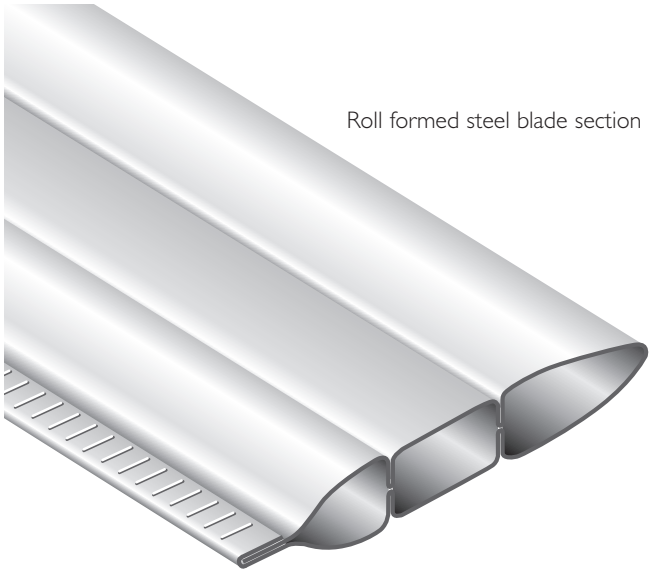

Blade End Cap (Linkage Side) and Drive Spindle

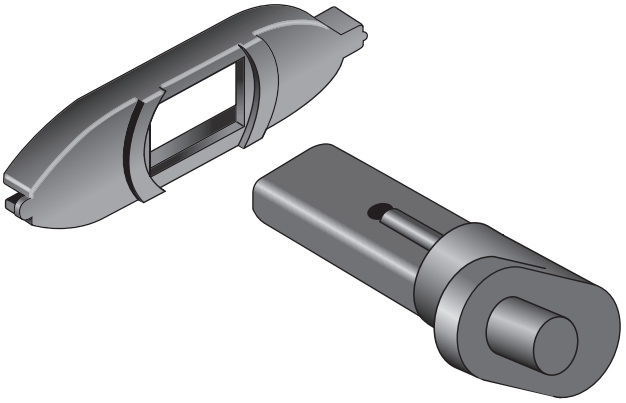

Blade End Cap and Spindle (Non Linkage Side)

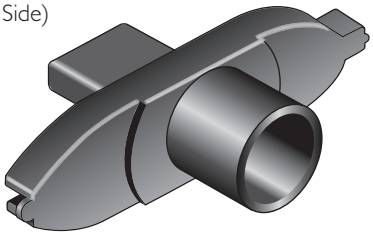

### Specifications and Testing

- Test conditions - Classes A, B & C of Eurovent 2/2 Table 1, DW 144 2016 Edition and BS EN 1751 Table C.2.
- Normal operating conditions - not exceeding 1000Pa, Classes A & B of DW 144 2016 Specification will apply.

## Flangefit

W x H = 100mm to 1000mm square

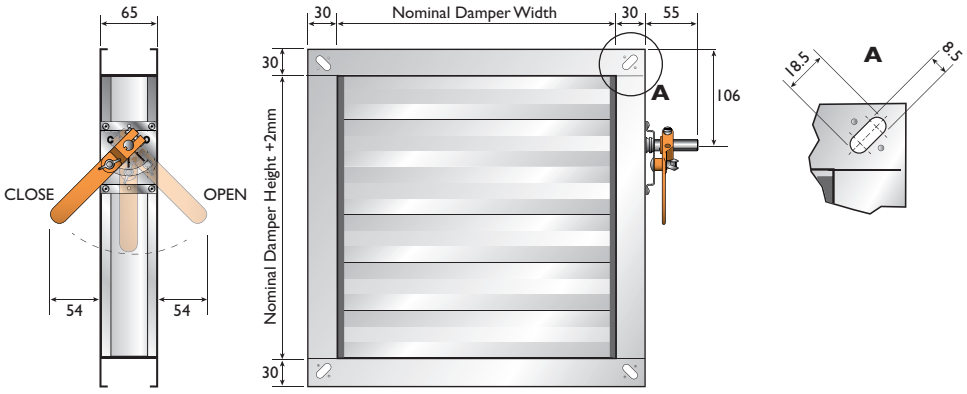


## Spigotfit

W x H = 100mm to 1000mm square

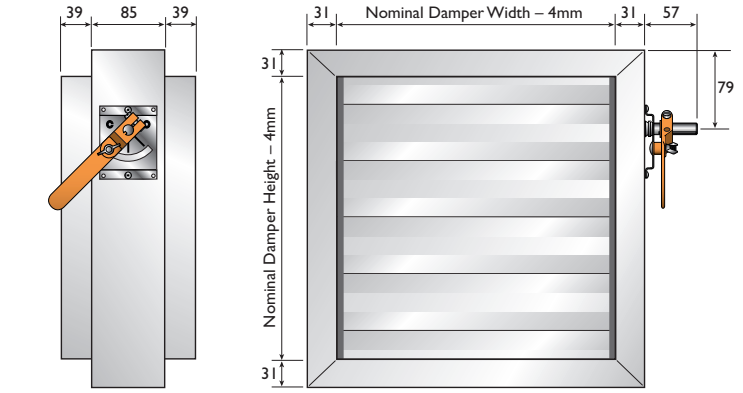


## Circular Spigotfit

D = 100mm to 1000mm diameter

* = 41mm (100-350mm dia.)
55mm (351-1000 dia.)

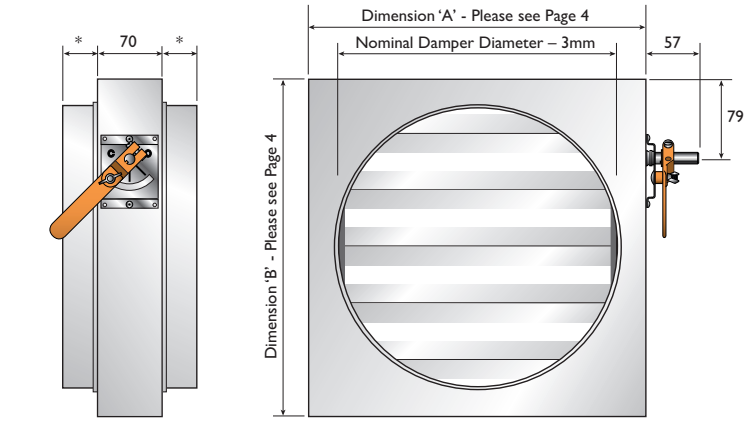


## Flat Oval Spigotfit

W x H = 100mm to 1000mm spigots

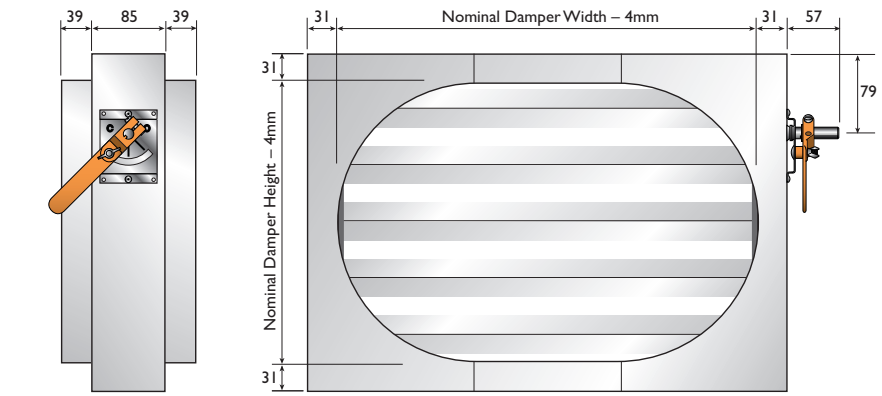

# VC Series

## Volume Control Dampers – Circular Spigotfit Dimensions

### Dimensions

**Nominal Damper Diameters 100mm - 1000mm**
Width (Dimension 'A') and Height (Dimension 'B') are Nominal Damper Diameter +57mm.

Except in the case of:

**Nominal Damper Diameter 160mm**
Width (Dimension 'A') and Height (Dimension 'B') are Nominal Damper Diameter +47mm.

**Nominal Damper Diameter 315mm**
Width (Dimension 'A') and Height (Dimension 'B') are Nominal Damper Diameter +42mm.

**Nominal Damper Diameter 355mm**
Width (Dimension 'A') and Height (Dimension 'B') are Nominal Damper Diameter +52mm.

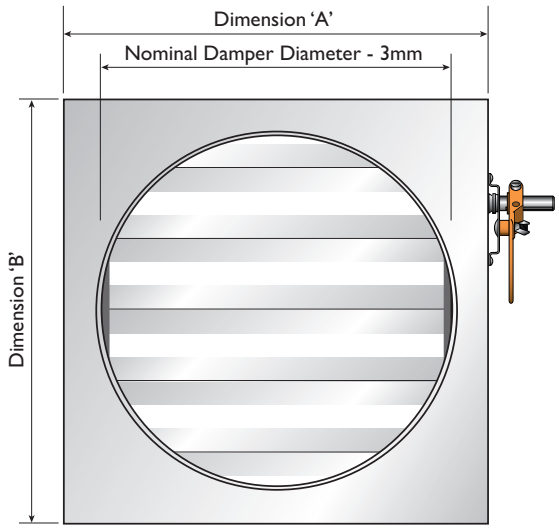


### Multiple Assemblies

Illustrated opposite are several variants of multiple section units. Where sizes exceed 1000mm square, multi-section units will be supplied.

All multiple units are shipped as individual sections for site assembly. Care must be taken not to drill or rivet into the damper linkage mechanism and stub shafts when fixing the provided joining strips.

Joining strips can be supplied pre-drilled upon request.

*It is recommended that for sizes greater than 1000mm in width or height, the HD Series Heavy Duty Damper is used.*

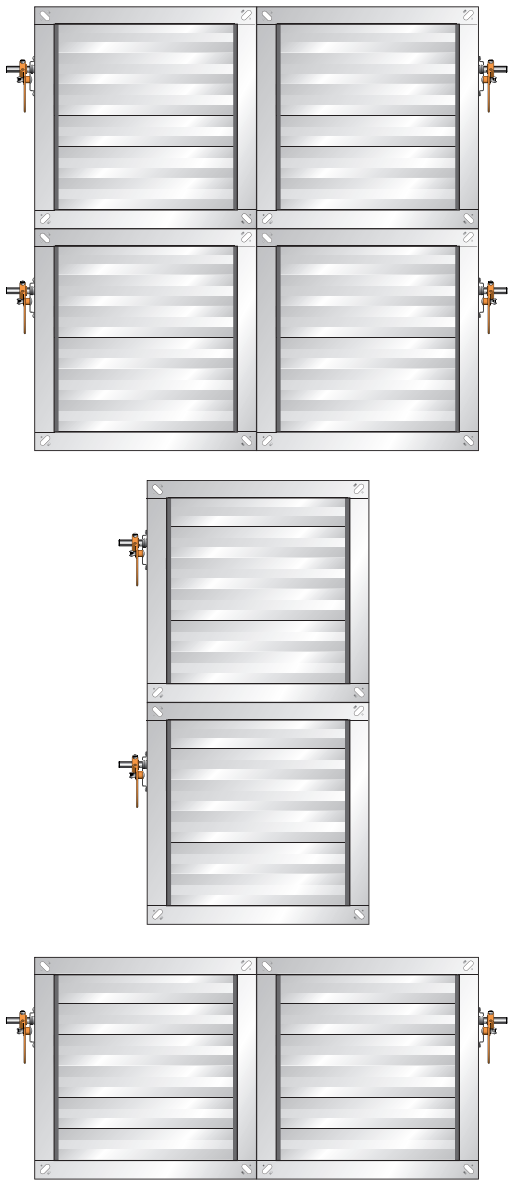

### Maintenance

BSB VC Series Dampers are designed for installation within normal dry filtered air systems. A programme of planned inspections should be carried out to include full operational checks, correct interface and function of any controls and control systems.

As a guide, dampers should be inspected annually and more frequently if exposed to fresh air intakes and/or inclement and dusty conditions.

Any application involving corrosive and/or aggressive hostile environmental conditions (e.g. swimming pools and coastal applications) may invalidate our warranty and should be referred to BSB Sales Office.

## Option H
### Hand Control

BSB's unique hand lockable quadrant is supplied complete from the factory.

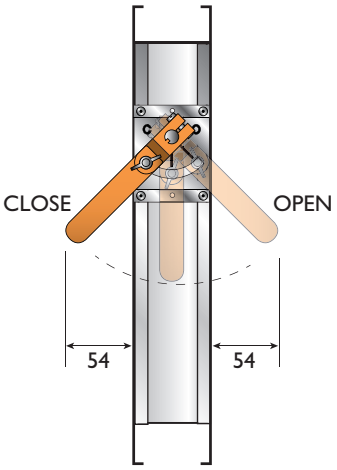


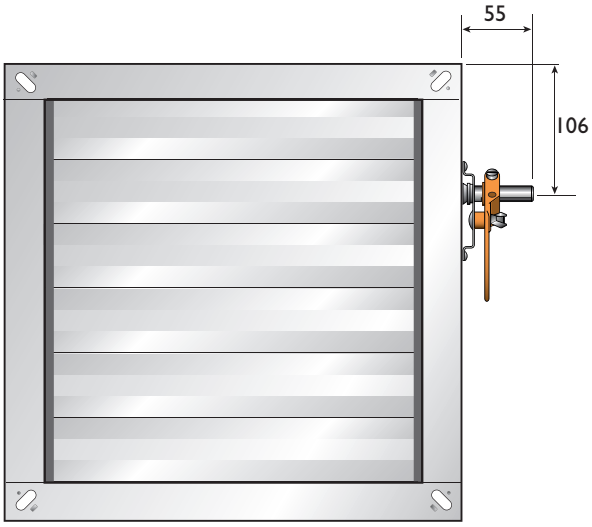


## Option E
### Extended Spindle

When the specification requires the VC Series Damper to be motorised, BSB supplies the damper with a 12.5mm diameter drive spindle, 55mm in length.

An optional actuator bracket can be supplied at extra cost.




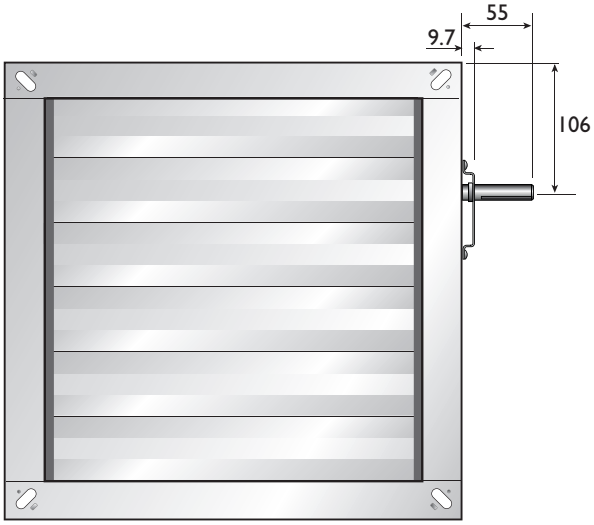


## Option M
### Electric Motor

The VC Series Damper can be supplied with motors having the following torque outputs:

5Nm up to 600mm square or 600mm diameter

10Nm from 601mm to 1000mm square or diameter

For additional technical details, please contact BSB's sales office.

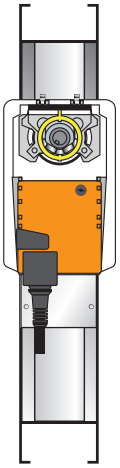

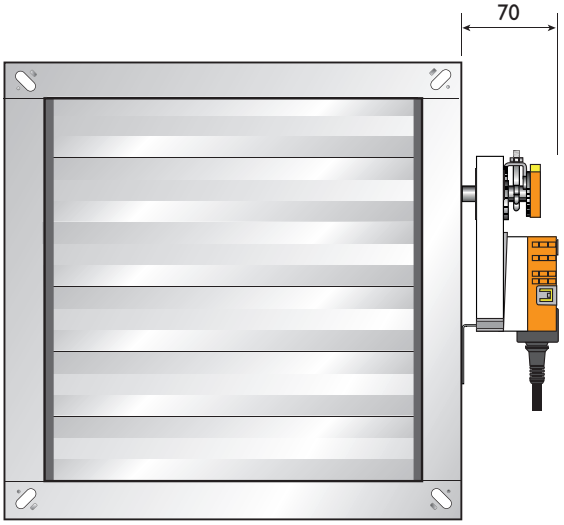

# VC Series

## Volume Control Dampers – Performance Characteristics

### Performance Characteristics

#### DW144 Permitted Case Leakage

Based on a 300mm x 300mm sample tested

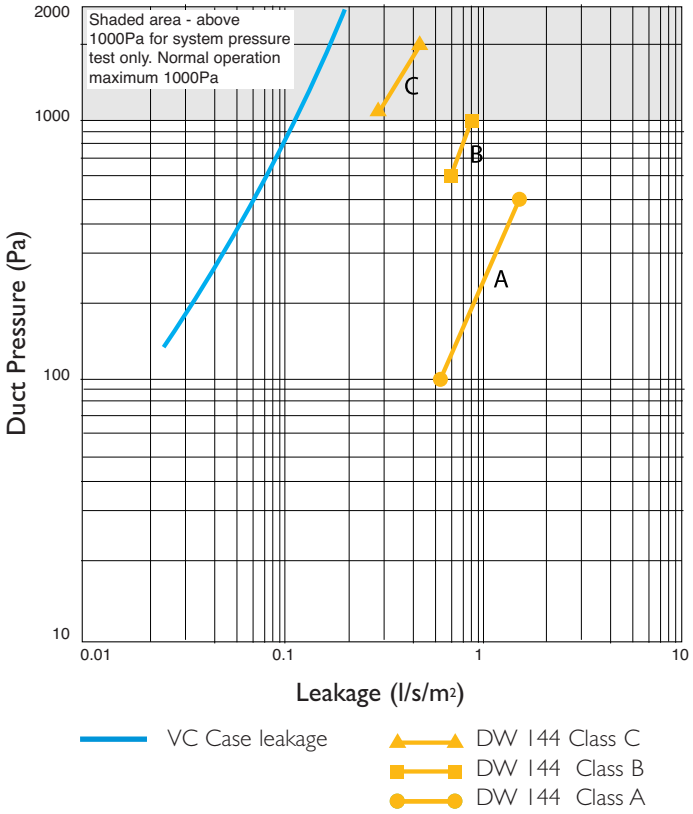


#### Eurovent Permitted Case Leakage

Based on a 300mm x 300mm sample tested

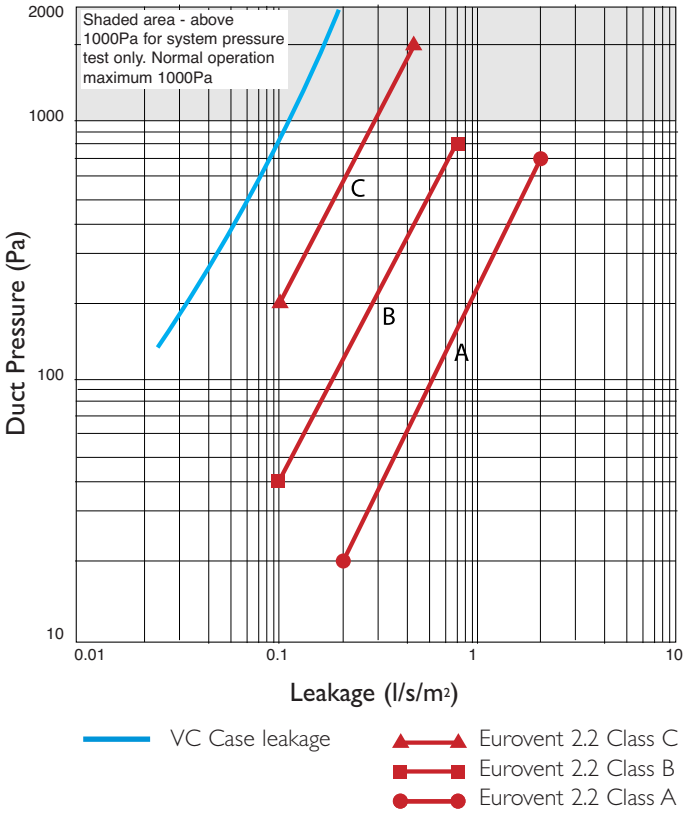


#### BS EN 1751 Permitted Case Leakage

Based on a 300mm x 300mm sample tested

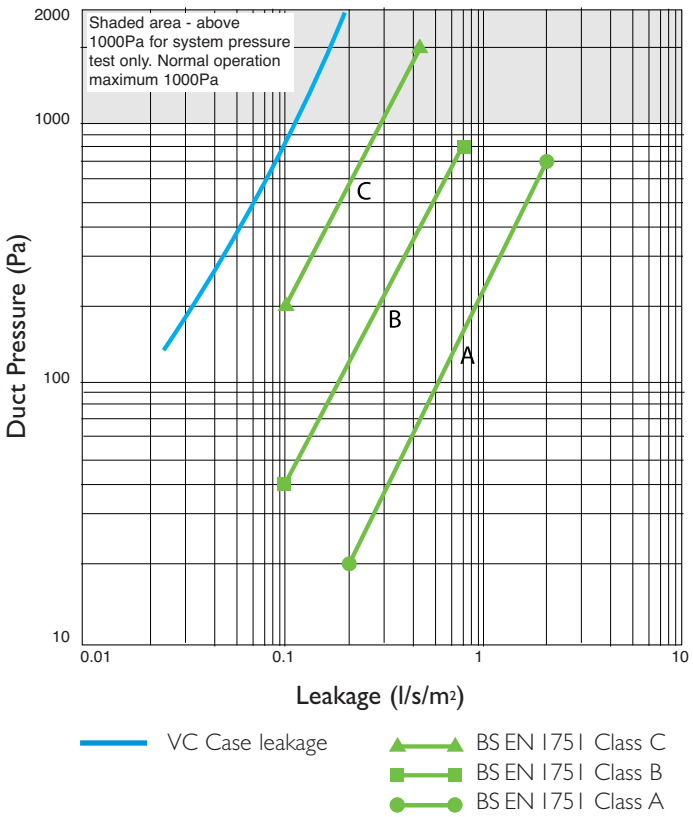


#### Pressure Loss

VC Series 600mm square

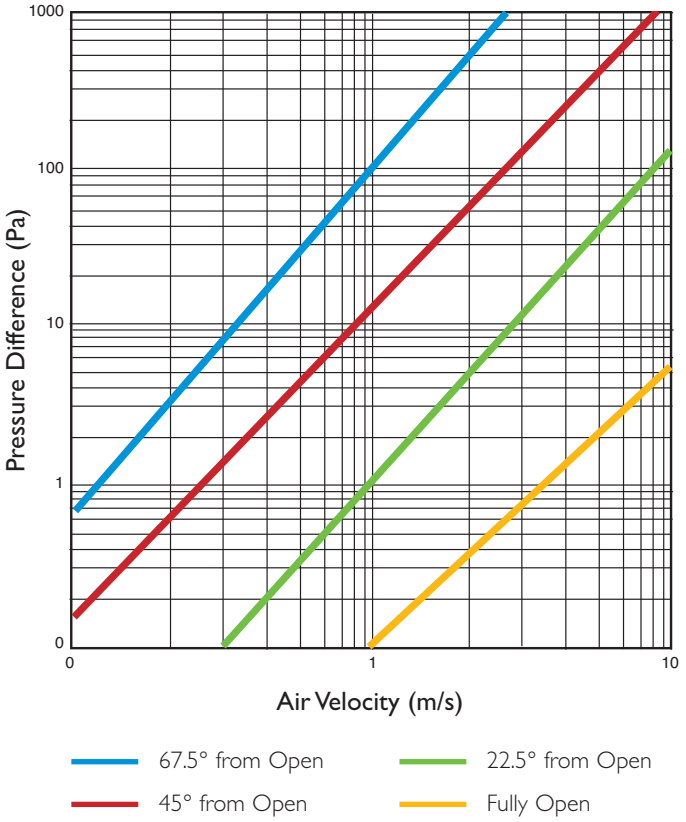

## Material Specification

**Casing**
1.2mm thickness galvanised mild steel to BS EN 10346. DX 51D Z275.

**Blades**
0.5mm thickness galvanised mild steel to BS EN 10346. DX 51D Z275.

**Blade Cap**
Injection moulded from glass filled Nylon 66.

**Drive Bearings**
Injection moulded from glass filled Nylon 66.

**Drive Linkage Bars**
1.5mm thickness galvanised mild steel to BS EN 10346. DX 51D Z275.

**Drive Spindle**
Dampers fitted with a handle will have a plastic injection moulded spindle made from Nylon 66. Dampers that have an actuator or extended spindle will have a spindle made from die-cast Zinc alloy ZL3 BS EN 12844.

**Handle**
Injection moulded from Nylon 66

**Quadrant Handle Bracket**
1.2mm thickness galvanised mild steel to BS EN 10346. DX 51D Z275.

**Rivets**
Rivets used meet European standards.

**Sealant**
Good quality silicone sealant.

## Operating Temperature

0°C to +70°C

## Optional Material Specification

**Casing**
- 1.2mm thickness Specification 1.4016 (430) stainless steel to BS EN 10088-2.
- 1.2mm thickness Specification 1.4404 (316L) stainless steel to BS EN 10088-3.

## Options

**Blades**
- 0.5mm thickness Specification 1.4016 (430) stainless steel to BS EN 10088-2.
- 0.5mm thickness Specification 1.4404 (316L) stainless steel to BS EN 10088-2.

**Drive Linkage Bars**
- 1.5mm thickness Specification 1.4016 (430) stainless steel to BS EN 10088-2.
- 1.2mm thickness Specification 1.4404 (316L) stainless steel to BS EN 10088-2.

**Handle Quadrant Plate**
- 1.2mm thickness Specification 1.4016 (430) stainless steel to BS EN 10088-2.
- 1.2mm thickness Specification 1.4404 (316L) stainless steel to BS EN 10088-2.

## Typical Tender/Specification Text

BSB's VC damper shall be provided for the balance and regulation of airflows within ducted air systems. The volume control dampers shall have 50mm wide roll formed steel blades rotating in extruded bearings. Blades shall have capped ends to reduce noise generation. Damper blade drive systems shall be outside of the air stream and covered to prevent the ingress of dust and debris and sealed to achieve case leakage Classes A, B & C.

VC volume control dampers shall meet duties up to 1000Pa and 12m/s.

Manually settable volume control dampers shall be supplied with a factory fitted quadrant that allows infinite adjustment of air flow.

Volume control dampers suitable for motorisation shall be fitted with an extended spindle. The extended spindle shall be easily convertible to quadrant control for manual setting without the need for any specialist tools or modifications if required.

## Weight Chart

| Damper Height (mm) | Damper Width (mm) | | | | | | | | | |
|---|---|---|---|---|---|---|---|---|---|---|
| | 100 | 200 | 300 | 400 | 500 | 600 | 700 | 800 | 900 | 1000 |
| **100** | 1.0 | 1.3 | 1.7 | 2.1 | 2.4 | 2.8 | 3.1 | 3.5 | 3.8 | 4.2 |
| **200** | 1.5 | 1.9 | 2.4 | 2.9 | 3.3 | 3.8 | 4.2 | 4.7 | 5.2 | 5.6 |
| **300** | 2.0 | 2.5 | 3.1 | 3.7 | 4.2 | 4.8 | 5.4 | 5.9 | 6.5 | 7.0 |
| **400** | 2.5 | 3.1 | 3.8 | 4.5 | 5.1 | 5.8 | 6.5 | 7.1 | 7.5 | 8.5 |
| **500** | 3.0 | 3.7 | 4.5 | 5.3 | 6.1 | 6.8 | 7.6 | 8.4 | 9.1 | 9.9 |
| **600** | 3.5 | 4.3 | 5.2 | 6.1 | 7.0 | 7.8 | 8.7 | 9.6 | 10.5 | 11.3 |
| **700** | 4.0 | 4.9 | 5.9 | 6.9 | 7.9 | 8.9 | 9.8 | 10.8 | 11.8 | 12.8 |
| **800** | 4.5 | 5.5 | 6.6 | 7.7 | 8.8 | 9.9 | 11.0 | 12.0 | 13.1 | 14.2 |
| **900** | 5.0 | 6.2 | 7.3 | 8.5 | 9.7 | 10.9 | 12.1 | 13.3 | 14.5 | 15.7 |
| **1000** | 5.5 | 6.8 | 8.0 | 9.3 | 10.6 | 11.9 | 13.2 | 14.5 | 15.8 | 17.1 |

The above weights (in kilograms) are for flanged models. For spigot models multiply by 1.5

# VC Series

## Volume Control Dampers – Ordering Codes

| VC | F | G | - | H |
|---|---|---|---|---|

**VC Series Volume Control Damper**

**Model**

- F Flangefit
- S Rectangular/Square Spigotfit
- C Circular Spigotfit
- O Flat Oval Spigotfit

**Blade Material**

- G Galvanised Steel Airfoil Blades
- S Stainless Steel Airfoil Blades (State Grade)

**Control Options**

- H Hand Control
- E Extended Spindle
- M Electric Motor (state voltage and model)
  For Pneumatic option, please refer to HD model

## Air, Fire and Smoke Control Products in the Range:































For full details of the complete Product Range, please refer to our individual product brochures, sales office or website.


## BSB Engineering Services Limited

Unit 56, Trinity Trade Centre, Mill Way, Sittingbourne, Kent ME10 2PD, UK • Tel: +44 (0)1795 422609 • Fax: +44 (0)1795 429543
For purchase orders and order related enquiries, please email: orders@bsb-dampers.co.uk
For pricing, technical and general enquiries, please email: enquiries@bsb-dampers.co.uk
Website: www.bsb-dampers.co.uk • A member of the Maico group



BSB Engineering Services Ltd. reserves the right to modify or withdraw any specification without prior notice that may result from continuous product development. The information contained within this brochure is correct at the time of going to press. (VC-06-2017)

ADCAS THE VOICE OF THE DUCTWORK INDUSTRY
Member of ADCAS Association

HEVAC
Member of HEVAC Association

LPCB UKAS PRODUCT CERTIFICATION 0007
ISO 9001:2015 Cert. No. 828

MADE IN BRITAIN
SOLD TO THE WORLD