MUB/T 042 450E4

Item no. 33658

Document type: **Product card**
Document date: **2016-05-24**
Generated by: **Systemair Online Catalogue**

Description

- Up to 120°C medium temperature, continuous operation
- Multi-functional use, e.g. for kitchen exhaust air
- Modular system
- Pre-assembled isolator is standard
- Low sound level
- Easy to maintain and reliable
- Motor outside the air stream



All MUB/T fans have impellers with backward curved blades, manufactured from aluminium. The MUB/T fans are suitable for medium temperatures up to 120°C continuously. Motor protection by cold conductors or thermal contact, to be connected to an external motor protection device. The casing consists of an aluminium frame with fibreglass reinforced plastic corners and double skin, galvanised steel panels with a 20 mm mineral wool insulation. Panels are removable, allowing flexible ventilation solutions - the air direction can easily be changed by 90°. With quick lock access door. The MUB bottom panel is shaped as a grease tray and incorporates a pre-mounted 1" drain plug. An isolator switch is mounted on the casing.
Several filter modules like f.e. activated carbon- or aluminum filters are available, calculated individually on the working point.

Technical parameters

Nominal data		
Voltage	230	V
Frequency	50	Hz
Phase	1	~
Input power (P1)	1014	W
Current	5,3	A
Max. airflow	1677	l/s
R.p.m.	1430	r.p.m.
Capacitor	30	µF
Weight	63	kg
Temperature data		
Max. temperature of transported air	120	°C
Sound data		
Sound pressure level at 3 m	50	dB(A)
Protection / Classification		
Insulation class	F	
Enclosure class, motor	IP54	IP
Default group		
Starting current	18	A

Diagrams

Diagrams

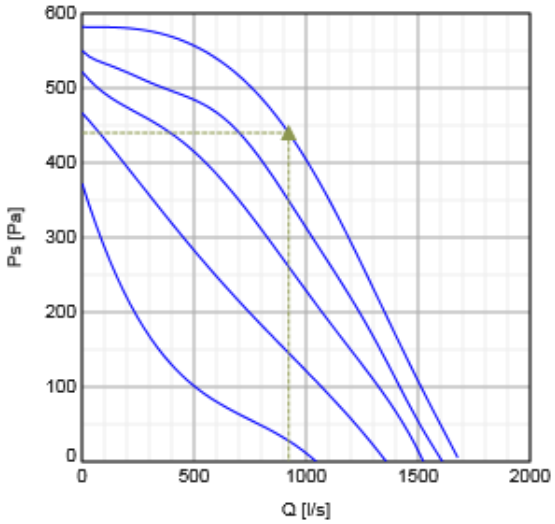

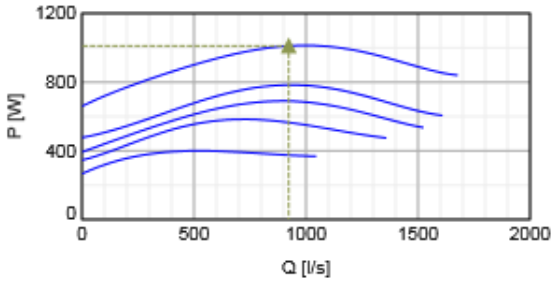

Hydraulic data

	Working point						
	Q [l/s]	Ps [Pa]	P [W]	n [r.p.m.]	I [A]	SFP [kW/m³/s]	U [V]
Max efficiency	▲ 922	▲ 440	▲ 1011	1406	4,5	1,1	230

Acoustics

Mid-frequency band, Hz

	Hz	Tot	63	125	250	500	1k	2k	4k	8k
LwA Inlet	dB(A)	72	59	61	65	67	66	63	48	51
LwA Outlet	dB(A)	74	61	63	67	69	68	65	60	53
LwA Surrounding	dB(A)	57	44	46	50	52	51	48	43	36

Measuring point: qv = 0,92 m3/s, Ps = 440 Pa

Dimensions

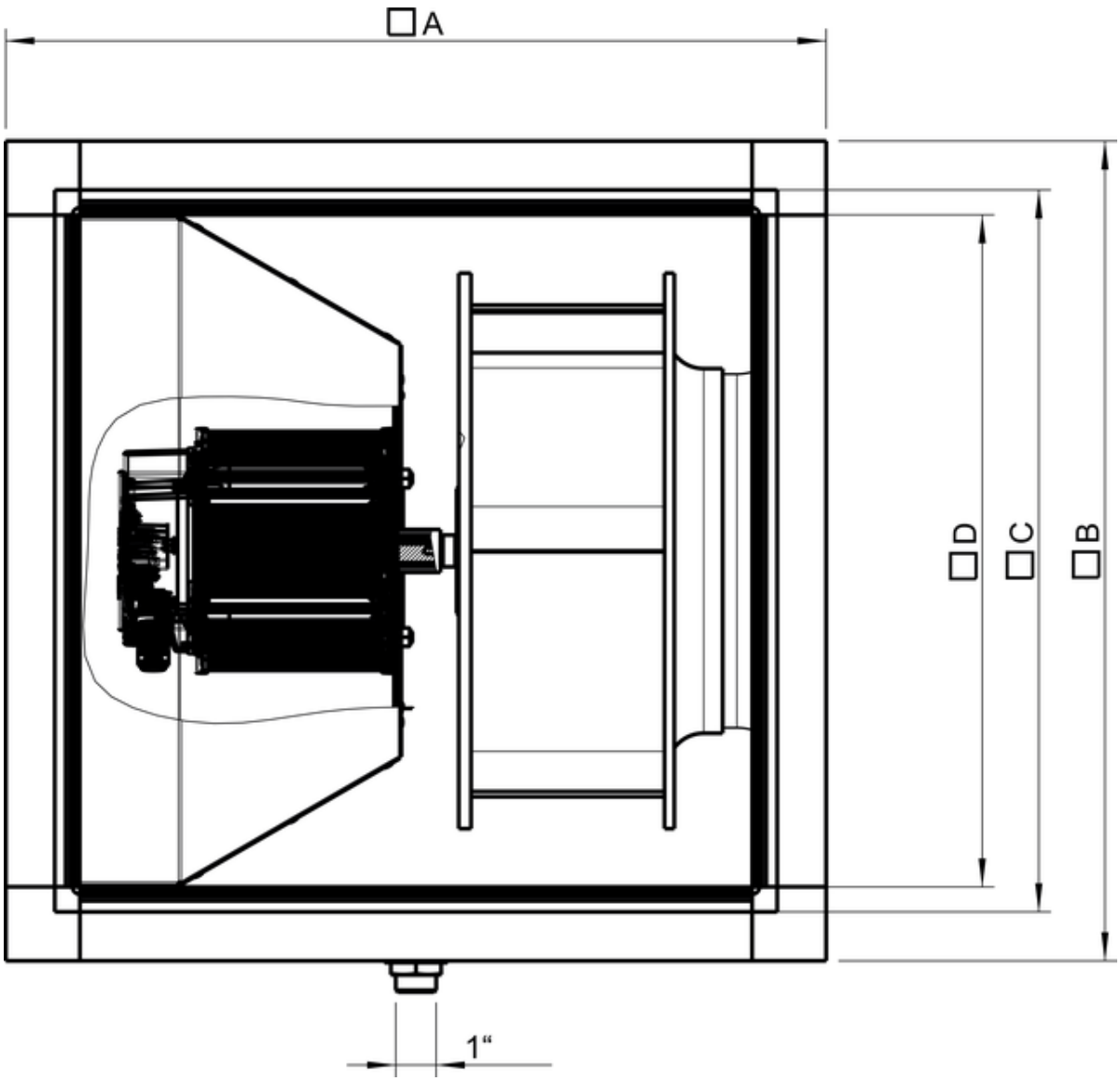

	□A	□B	□C	□D
MUB/T 042 450	670	670	590	548

Wiring

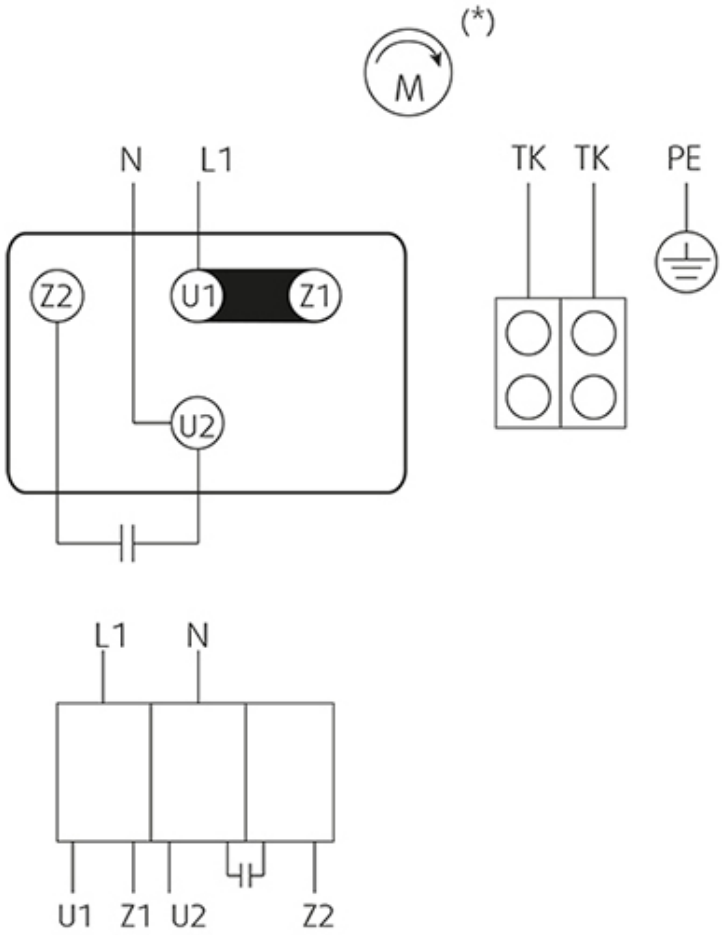

Accessories

Electric accessories

S-ET 10 Motor Protection (5154)
REU 7 Speed control (5007)
RTRE 7 Speed control (5011)

Accessories

CCM outlet MUB042 d400 (311682)
CCM outlet MUB042 d500 (311683)
SRKG 042/588-588 shutter valve (4868)
UGS 042/500 adapter flex. (4357)
FGV 042/586-586 flex. conn. (4605)
SDM Service Door MUB 042 comp. (32572)
WSD 042 (730x730x70) complete (31481)
M-SG 042/588x588 (301345)
CCM inlet MUB042 d400 (311780)
CCM inlet MUB042 d500 (311781)
WSG 042 MUB/T complete (36071)
SD-MUB Vibration pad set (37324)
CCMI outlet 042 d400 insul KIT (313845)
CCMI outlet 042 d500 insul KIT (313846)

Documentation

IMO_MUB_141026_DE,EN,SE,DK,ES,RU_001_311722_web.pdf (2,95MB)

Operating and maintenance instructions_2010-07.pdf.pdf (488,24kB)

EC-declaration of conformity AxZent-KBT-KBR-MUB-K-MUB-T-DVV_DE-EN.pdf (103,14kB)

Internal

Manufacturers Certificate.pdf (51,93kB)

EPS diagrams

Specification text

Multibox Thermo fan for medium temperatures up to 120 °C in continuous operation, reliable, for easy and direct installation in duct systems. Casing frame construction made of aluminium hollow profiles and plastic corners for highest impact resistance. Double skin galvanised steel panels, thermally and sound insulated with a 20 mm layer of mineral wool, smooth inner sides. Removable service panel. Bottom panel is shaped as a grease tray and incorporates a pre-mounted 1" drain plug.

Free-running, backward curved circular impeller made of aluminium. Impeller acc. to VDI 2060, balancing quality Q 6.3, dynamically balanced in two planes acc. to ISO 1940 T1.

Voltage controllable internal rotor motor, standard motor IEC (IP54), outside the air flow, easy to maintain. Integral thermal contacts with leads to a motor protection device. Speed-controlled by voltage reduction via transformer or via frequency inverter. Terminal box fitted on the motor. Pre-assembled isolator switch.

Multifunctional use, square connection, intake and discharge side. Variable outlet direction, can be modified on site.

Suitable for kitchen exhaust.
Horizontal installation position only.

For indoor installation.
For outdoor installation with corresponding accessories.