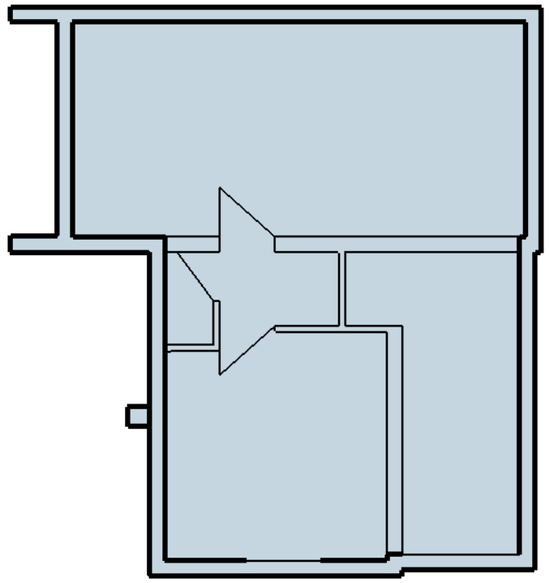

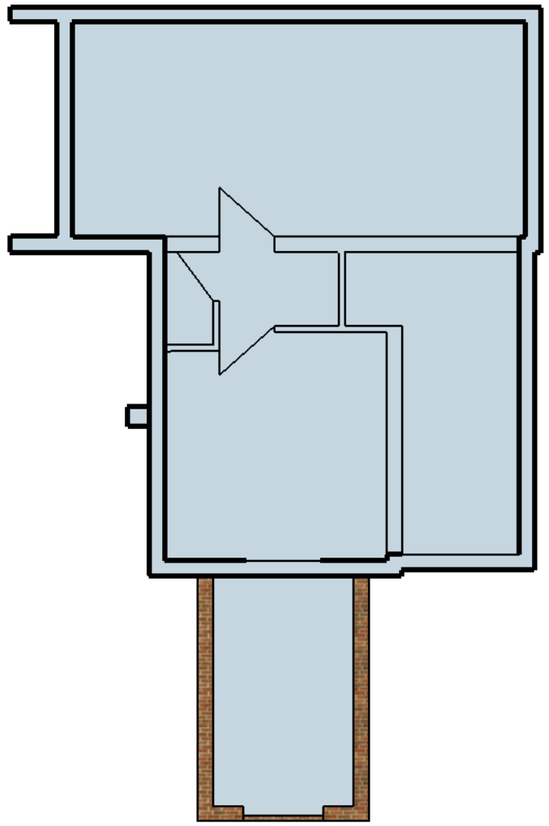

Mr & Mrs Harris
existing floor plan and proposed
Scale 1:100

Mr & Mrs Harris
existing floor plan and proposed
Scale 1:100

Mr & Mrs Harris
existing floor plan and proposed
Scale 1:100

Mr & Mrs Harris
existing floor plan and proposed
Scale 1:100