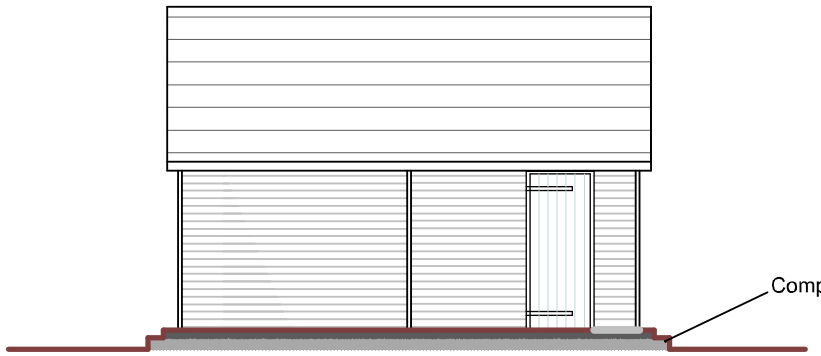

Side Elevation (North West)

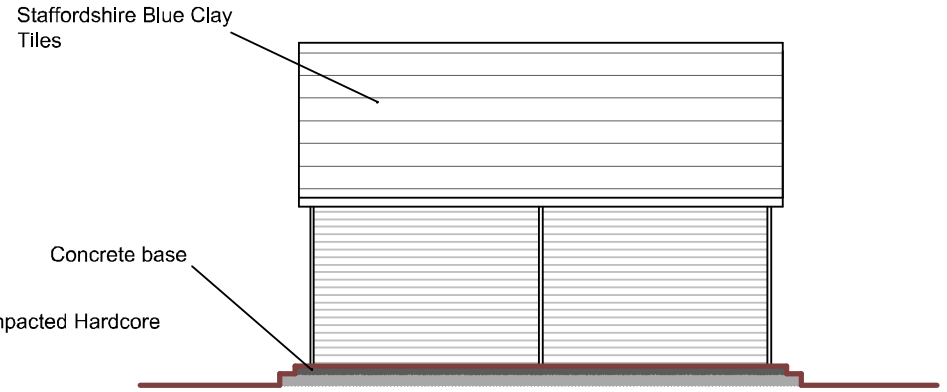

Side Elevation (South East)



Rear Elevation (North East)

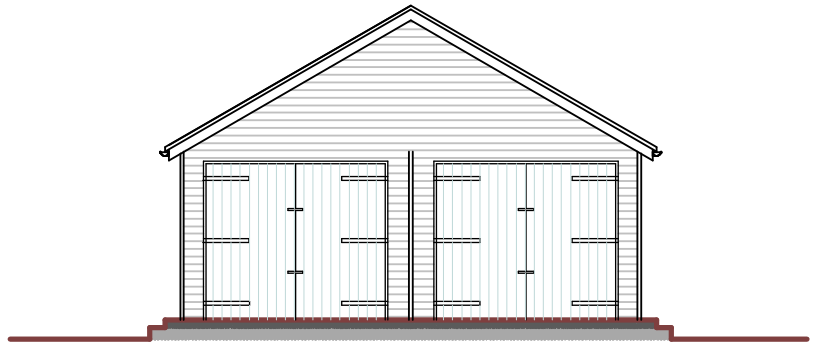

Front Elevation (South West)

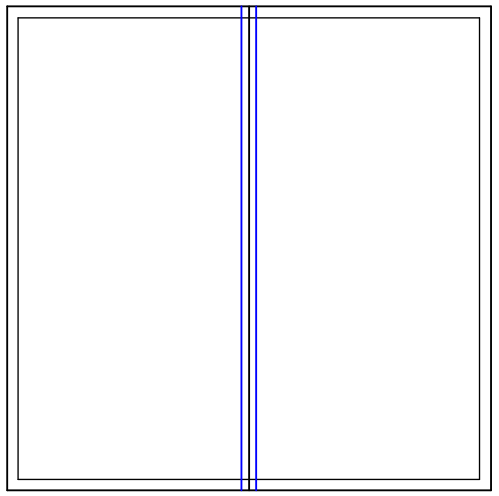

Roof plan

Scale

0 1 2 3 4 5

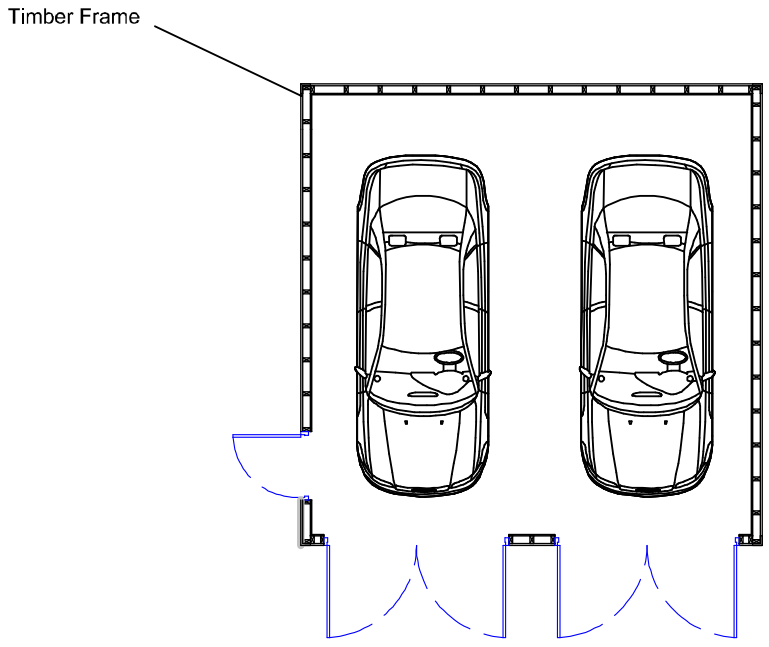

Ground floor plan

Scale

0 1 2 3 4 5



DBD Architectural Consultancy Ltd ©2017

1. Copyright is vested with DBD Architectural Consultancy Ltd.

2. All dimensions to be checked on site before proceeding.

3. Contractor to check/adjust dimensions of new work to suit existing conditions.
Do not assume existing structure or details are plumb, square or level.

4. Contractor must notify the architect of any discrepancies before proceeding.

5. All drawings to be read in conjunction with all other consultants drawings and specs.

Rev	Date	Description
A	1.2.18	Side door relocated & picture added

DBD Architectural Consultancy

DBD Architectural Consultancy Ltd
50 Broad Street, Leek,
Staffordshire, ST13 5NS
01538 383118
mail@dbdconsultants.co.uk
www.dbdconsultants.co.uk

Client
Mr & Mrs J Grattidge
Halls Croft
Rudyard
ST13 8RN

Project
Detached garage to land to front Halls Croft

Title
Proposed Plan

Stage: Planning

Size:	Date:	Job No:
A3	1.2.18	1770-100

Scale: 1:100

Drawing Number: PL 04 A