Details for Stone Lintels and Cills
39, Moorhouse St. Leek

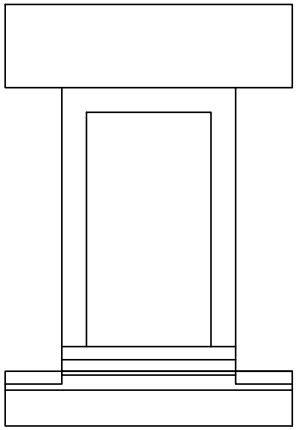

Toilet Window

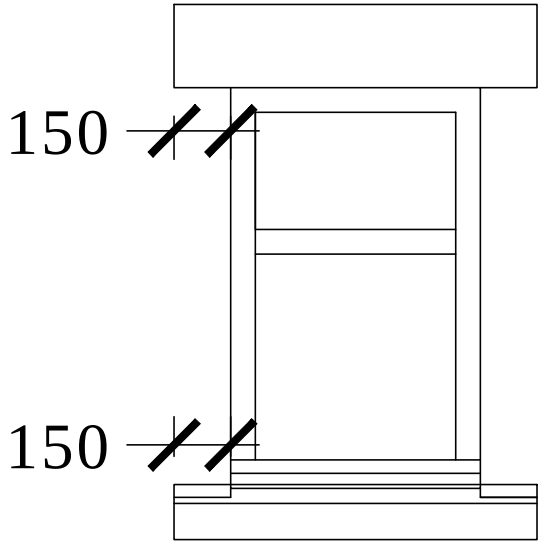

Utility Window

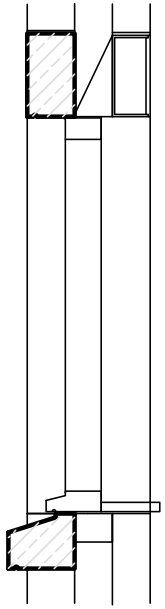

Section 1:20

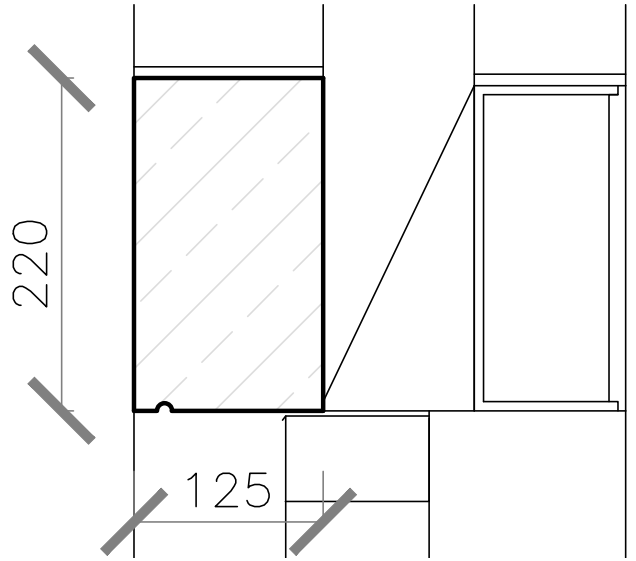

1:5 Scale Lintel Section

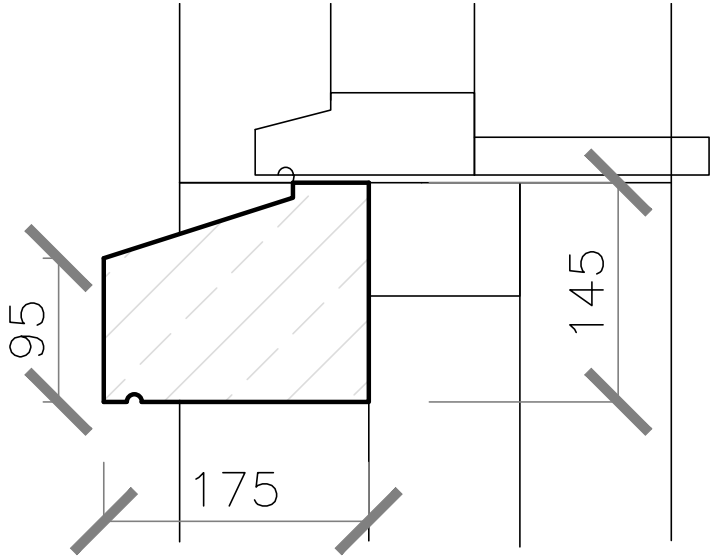

1:5 Scale Cill Section

Natural Stone Lintels and Cills produced by Bridestones Quarry.