Details for External Door and Frame
39, Moorhouse St. Leek

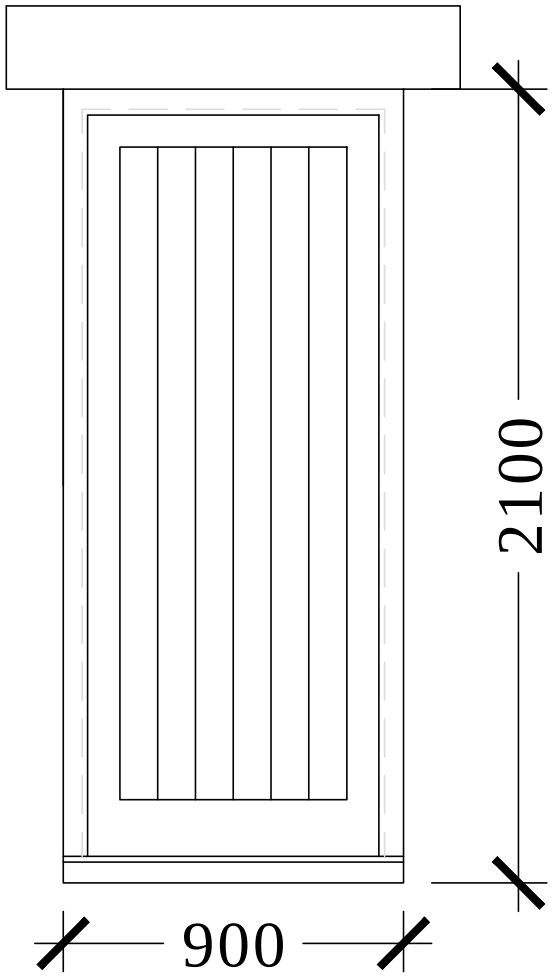

Utility Door

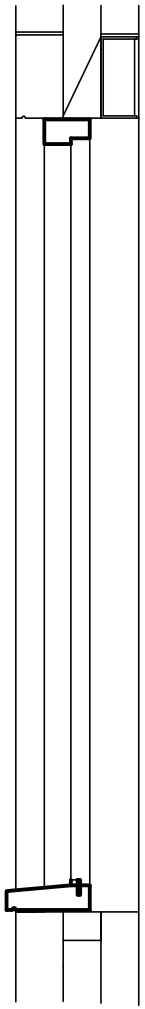

Section 1:20

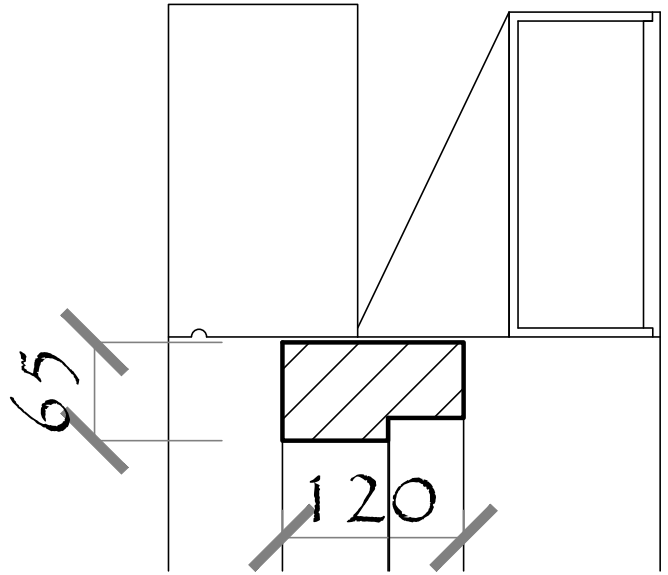

1:5 Scale Head Section

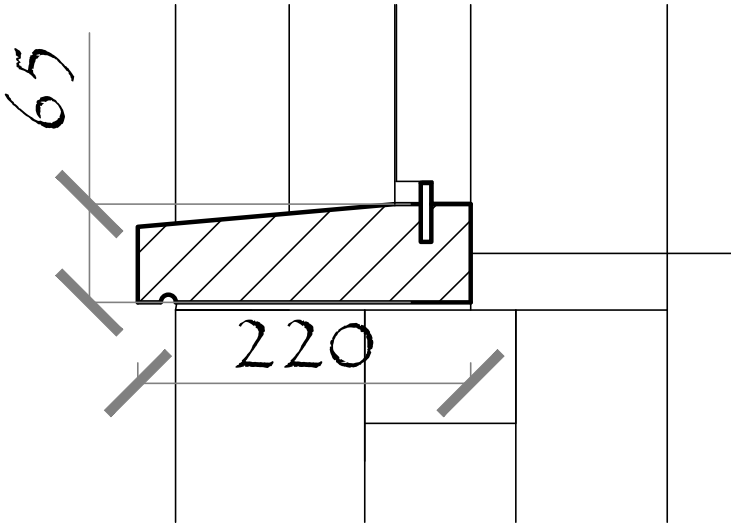

1:5 Scale Cill Section

Framed and Ledged Vertical Boarded door produced by Howdens Joinery Ltd.