SCALE 1:15

2000MM
1850MM
1700MM
1550MM
1400MM
1250MM
1200MM
1050MM
900MM
750MM
600MM
450MM
300MM
150MM
0MM

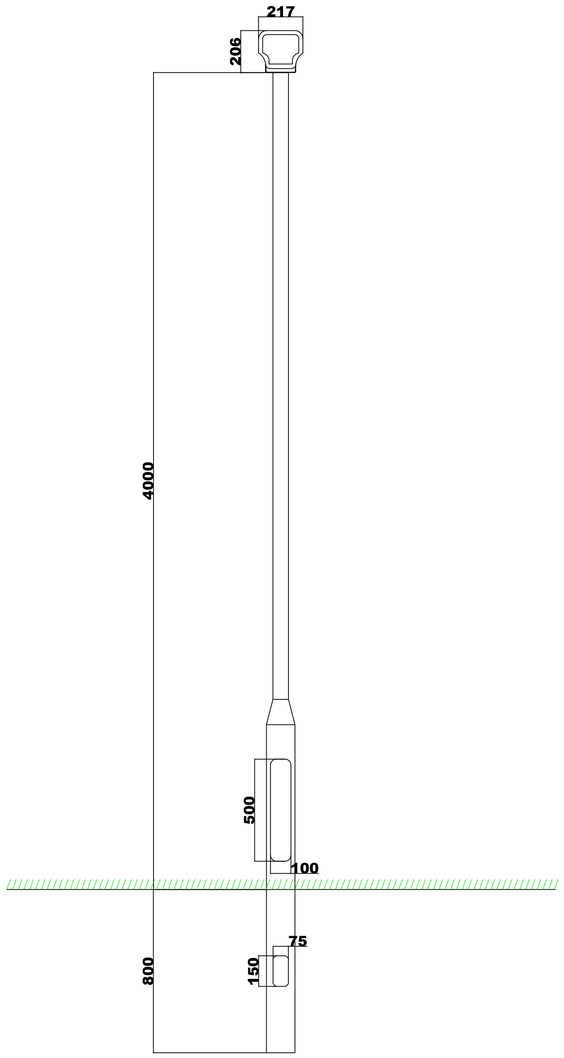

GROUND LEVEL

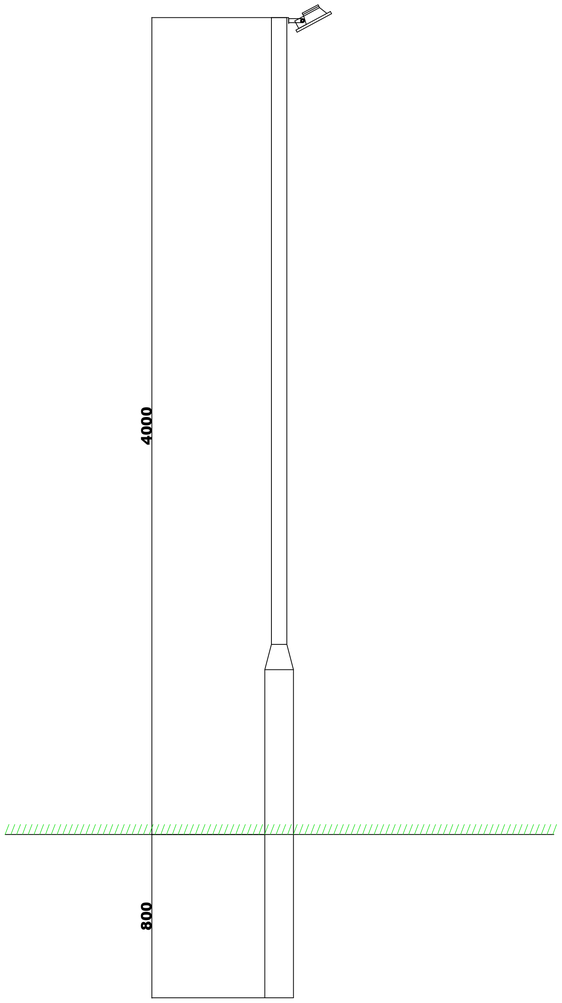

General notes

All dimensions are in millimetres unless otherwise stated.
Installer must always verify space
and dimensions prior to any work being carried out.
All works to comply with current building regulations.

NOTES

bles
B&L Electrical Services Limited
232 Normacot Road, Longton
Stoke on Trent
Stafforshire, ST3 1RA
Tel 01782 501555
Fax 01782 501539

ECA JOINT INDUSTRY BOARD CHAS

Project
Car Park J Lighting

Client
Alton Towers Resort

Drawing Title
Car Park J Lamp Post

Scale 1:15 @ A1

Drawn by A.A Job No Q3194

Approved by K.B Date 02.02.2018

Drawing No 3194-E-200-P Rev