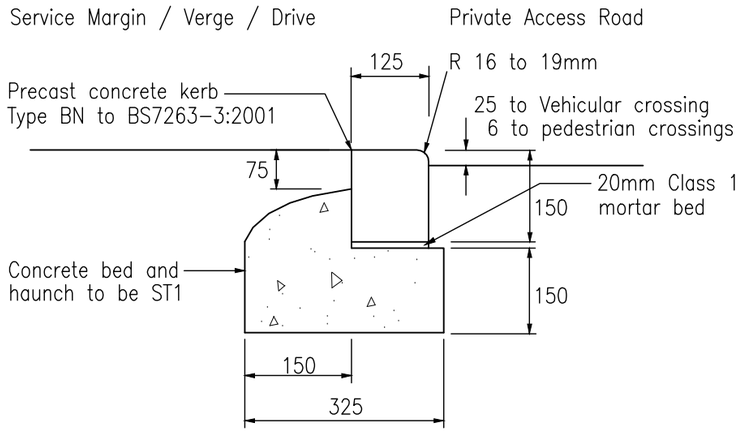

FLAT KERB TYPE BN

Scale 1:10

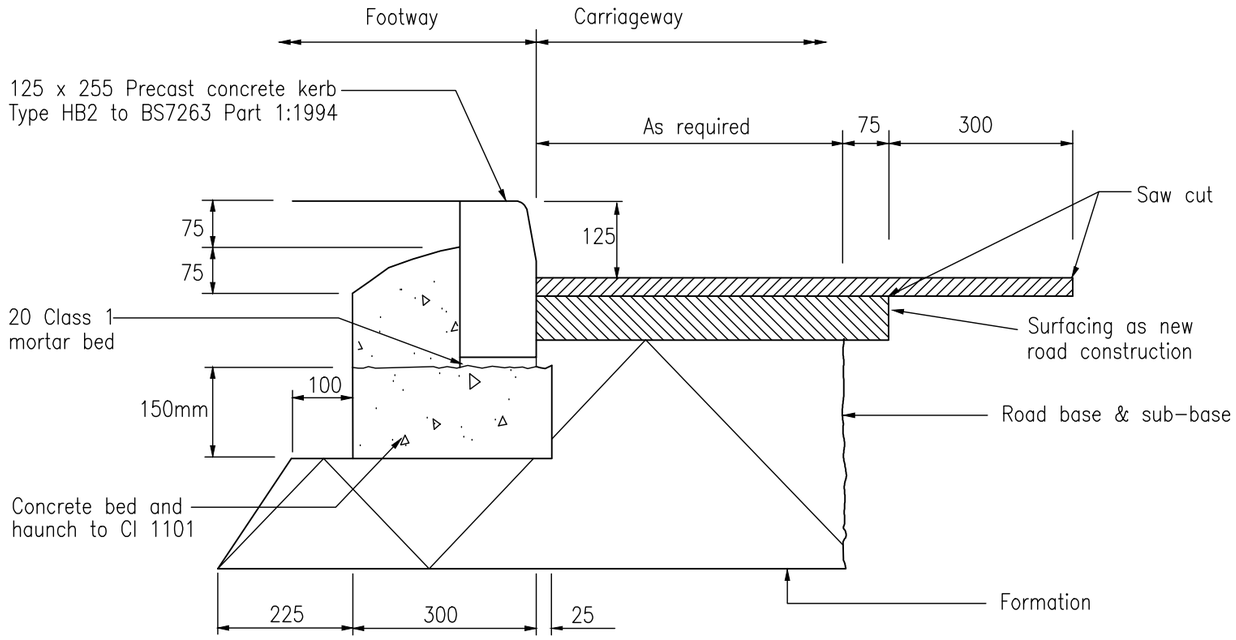

KERB TYPE HB2

(SHOWING TIE IN WORKS WITH EXISTING ROAD SURFACING)

Scale 1:10

Notes

1 All dimensions are in millimetres

2 All Clause references are from the DTp Specification for Highway Works

3 All materials and workmanship to comply with Manual of Contract Documents for Highway Works Specification for Highway Works and Highway Construction Details (MCDHW) current at the time of construction unless amended by the Staffordshire Residential Design Guide and its associated technical appendices.

4 This drawing to be read in conjunction with drawings listed on the drawing issue sheet

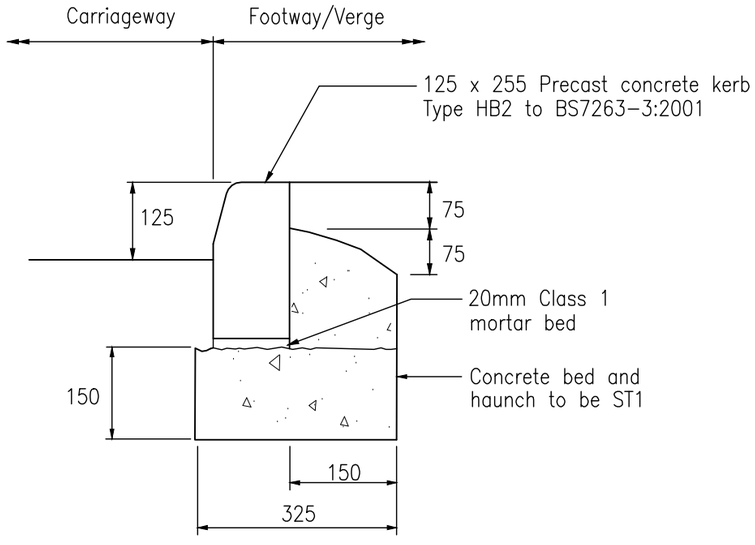

KERB TYPE HB2

1:10

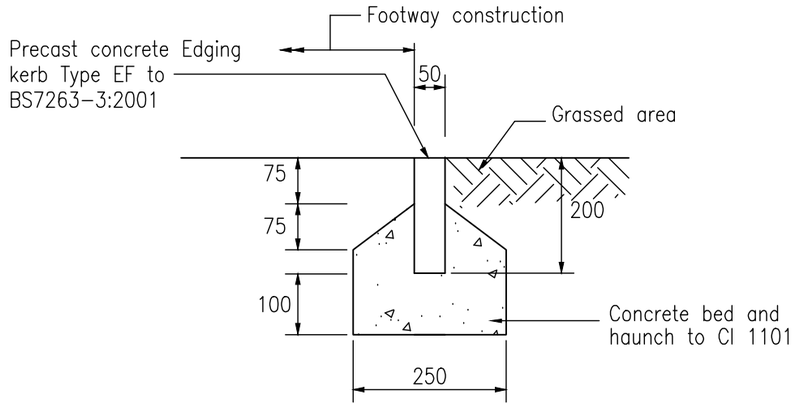

EDGING KERB TYPE EF

Scale 1:10

PRELIMINARY

REV	DATE	NATURE OF REVISION	BY	CHECKED

DO NOT SCALE THIS DRAWING. THIS DRAWING IS COPYRIGHT. CONTRACTORS MUST CHECK ALL DIMENSIONS ON SITE. ARCHITECT / ENGINEER TO BE NOTIFIED OF ANY DISCREPANCIES.

Engineering Consultancy
RBA Ltd, 26 Mostyn Road, Colwyn Bay, Conwy LL29 8PB
01492 533117 admin@rba.ltd.uk www.rba.ltd.uk

CLIENT: BERNEL LTD

PROJECT: DEVELOPMENT ON LAND AT SUGAR STREET, RUSHTON SPENCER

DRAWING: CONSTRUCTION DETAILS: KERBS, EDGINGS AND CHANNELS

SCALE	SIZE	DRAWN	CHKD	DATE	JOB No	DRG No	REV
SHOWN	A3	RGLR	JME	12.12.17	5307	D04	-