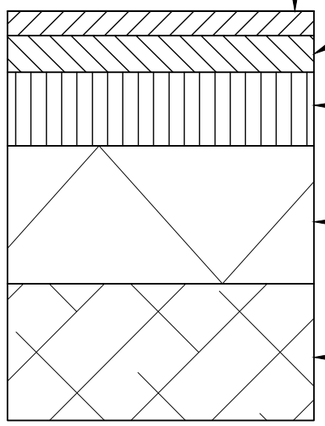

ESTATE ROAD CONSTRUCTION
NTS

CBR value of formation	Layer thickness
CBR 15% or greater	150mm sub-base
CBR 5% or less than 15%	225mm sub-base laid in 2 layers (max single layer thickness 125mm)
CBR 2% or less than 5%	150mm sub-base plus 350mm capping
CBR less than 2%	150mm sub-base plus 600mm capping

CAPPING LAYER AND
SUB BASE THICKNESSES

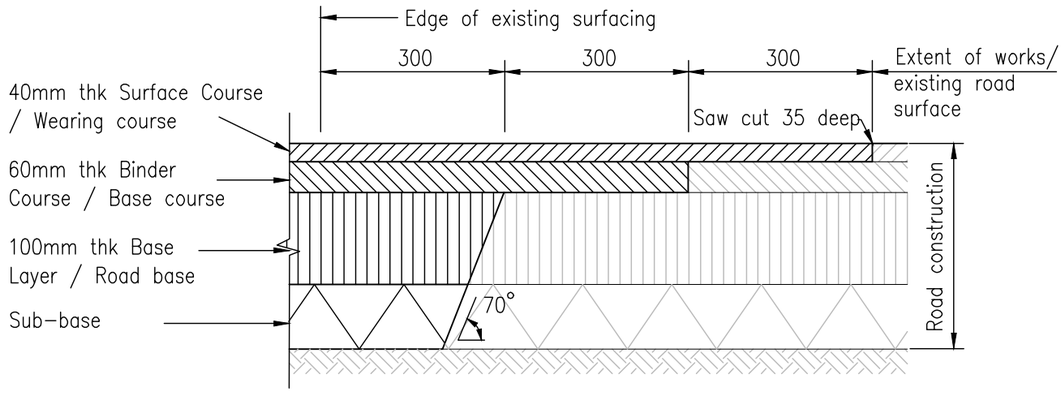

TYPICAL TIE-IN
ABUTTING EXISTING CARRIAGEWAY
NTS

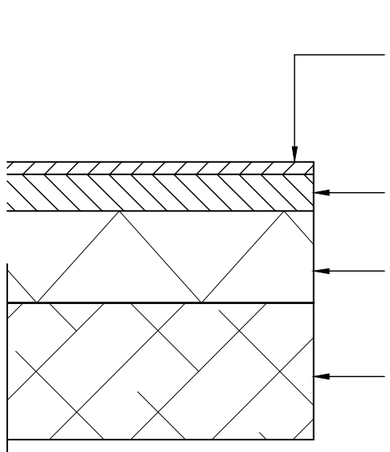

FOOTPATH
NTS

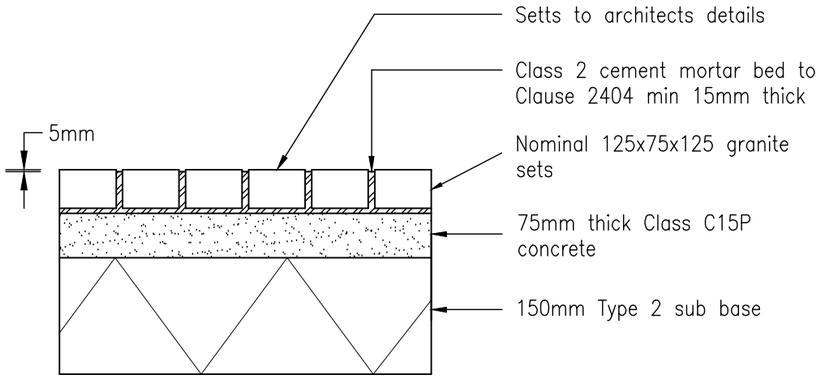

GRANITE SETTS / PRIVATE DRIVEWAY CONSTRUCTION
NTS

PRELIMINARY

Notes

1 All dimensions are in millimetres

2 All Clause references are from the DTp Specification for Highway Works

3 All materials and workmanship to comply with Manual of Contract Documents for Highway Works Specification for Highway Works and Highway Construction Details (MCDHW) current at the time of construction unless amended by the Staffordshire Residential Design Guide and its associated technical appendices.

4 The CBR of the subgrade shall be measured, either in-situ to BS 1377: part 9, or in the laboratory to BS1377: part 4

5 In-situ tests and samples for laboratory testing shall be taken below any desiccated layers and at least 0.6m below ground level. Where ground levels are raised capping layer to be well compacted in 150mm layers, proof rolled at underside of sub base level and CBR measured as above.

6 Advice should be sought for CBR values below 1.6% for required construction thicknesses in existing ground.

7 Where sub-grade is found to be frost susceptible minimum total construction thickness to be 450mm

8 Max air voids 6%±3% for Binder and Base courses for carriageway construction. Tested in accordance with BS EN 12697-8: 2003

9 Maximum 40mm stone size for Sub-base

10 This drawing to be read in conjunction with all drawings listed on the drawing issue sheet

11 All final wearing courses must only be laid once construction operations on site have been completed.

12 Dressed natural stone setts shall comply with BS435 and shall be laid in accordance with the relevant sections os BS7533. In particular, setts shall be laid on a 150mm wet lean concrete bed.

REV	DATE	NATURE OF REVISION	BY	CHECKED

DO NOT SCALE THIS DRAWING. THIS DRAWING IS COPYRIGHT. CONTRACTORS MUST CHECK ALL DIMENSIONS ON SITE. ARCHITECT / ENGINEER TO BE NOTIFIED OF ANY DISCREPANCIES.

Engineering Consultancy
RBA Ltd, 26 Mostyn Road, Colwyn Bay, Conwy LL29 8PB
01492 533117 admin@rba.ltd.uk www.rba.ltd.uk

CLIENT: BERNEL LTD

PROJECT: DEVELOPMENT ON LAND AT SUGAR STREET, RUSHTON SPENCER

DRAWING: CONSTRUCTION DETAILS: CONSTRUCTION LAYERS SHEET 1 OF 2

SCALE	SIZE	DRAWN	CHKD	DATE	JOB No	DRG No	REV
SHOWN	A3	RGLR	JME	12.12.17	5307	D02	-