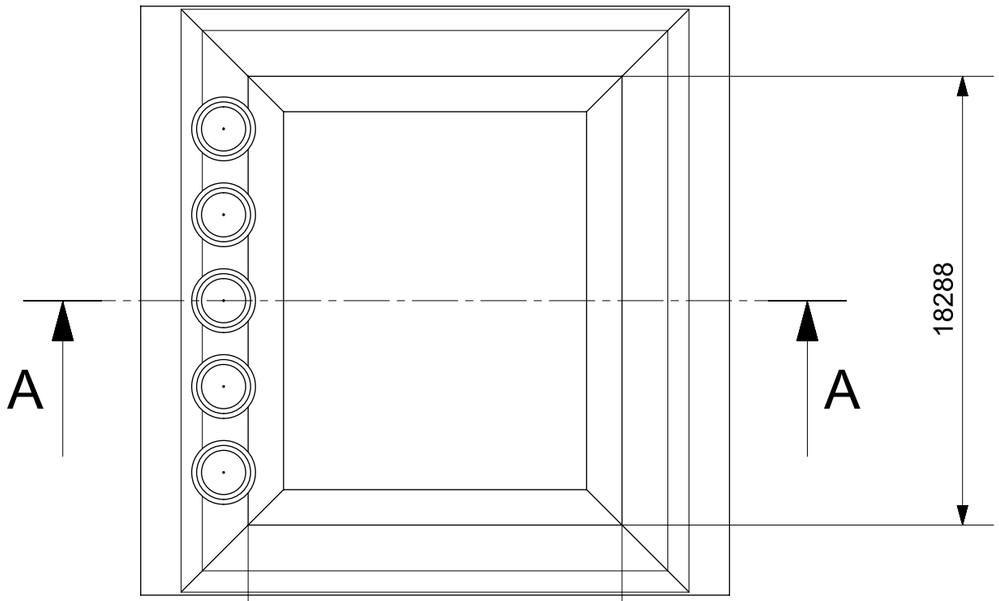

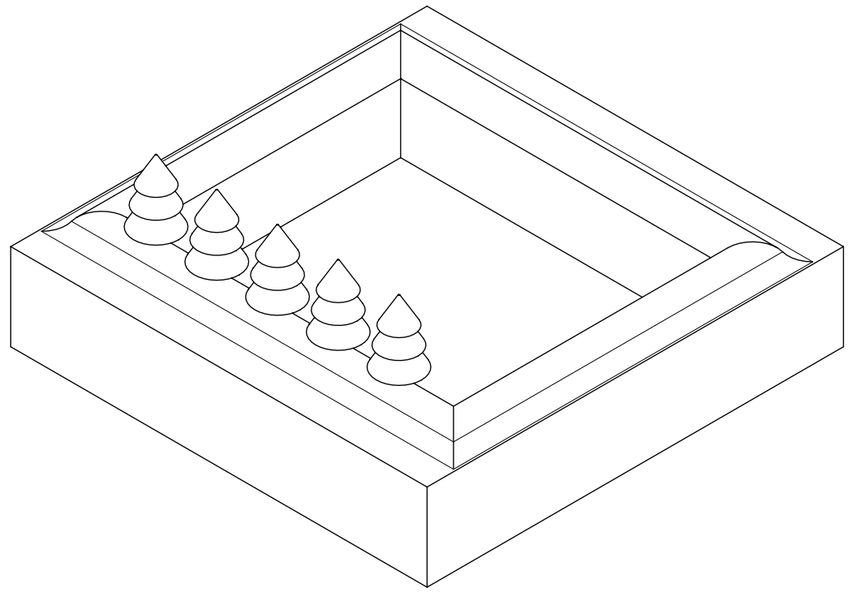



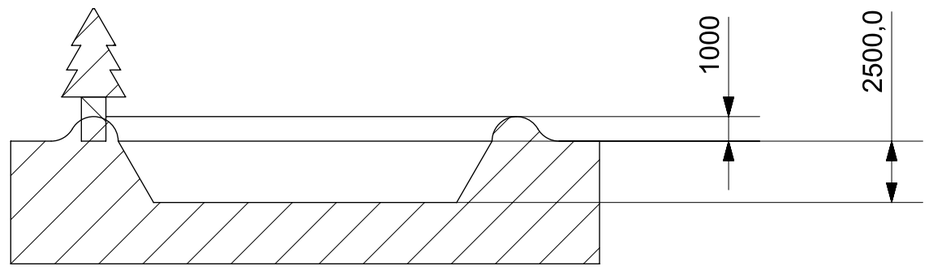

SECTION A-A

TITLE:	SP - 60' X 50'	DRAWN DATE: 28/09/2017
UNITS:	COMPANY:	ISSUED DATE:
mm	GRAHAM WATKINS & CO ESTATE AGENTS	28/09/2017
SIZE:	DRAWN BY:	SCALE:
A3	RLW	1:250