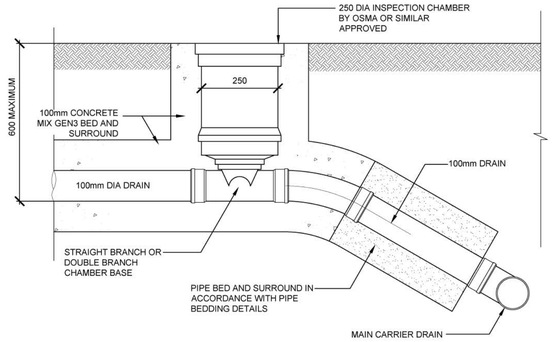

250mm DIAMETER SHALLOW INSPECTION CHAMBER (SIC)

MAXIMUM DEPTH OF 600mm (NOT TO BE USED FOR ADOPTABLE DRAINAGE OR IN AREAS SUBJECT TO VEHICLE LOADING)

N.T.S.

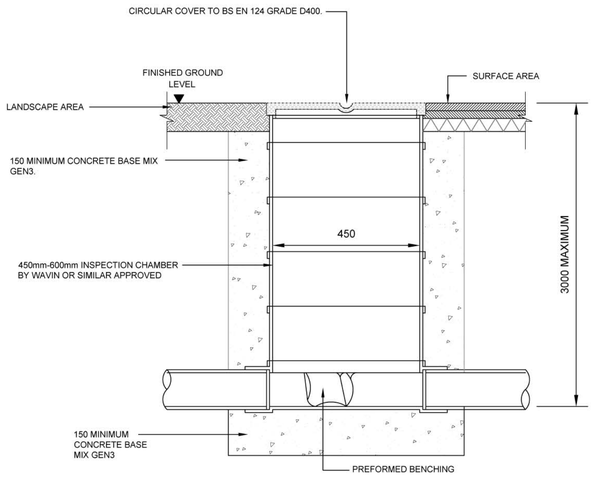

450mm DIAMETER POLYPROPYLENE INSPECTION CHAMBER (PIC)

N.T.S.

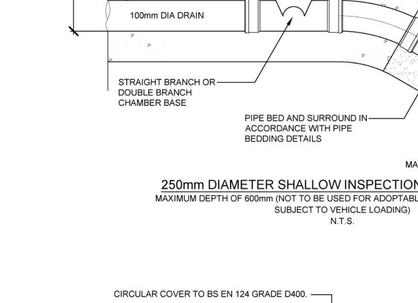

TYPICAL SECTION THROUGH ROAD GULLY

N.T.S

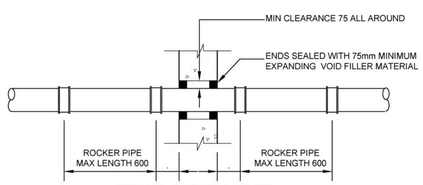

TYPICAL DETAIL OF PIPE THROUGH SLEEVED OPENING IN STRUCTURE

N.T.S.

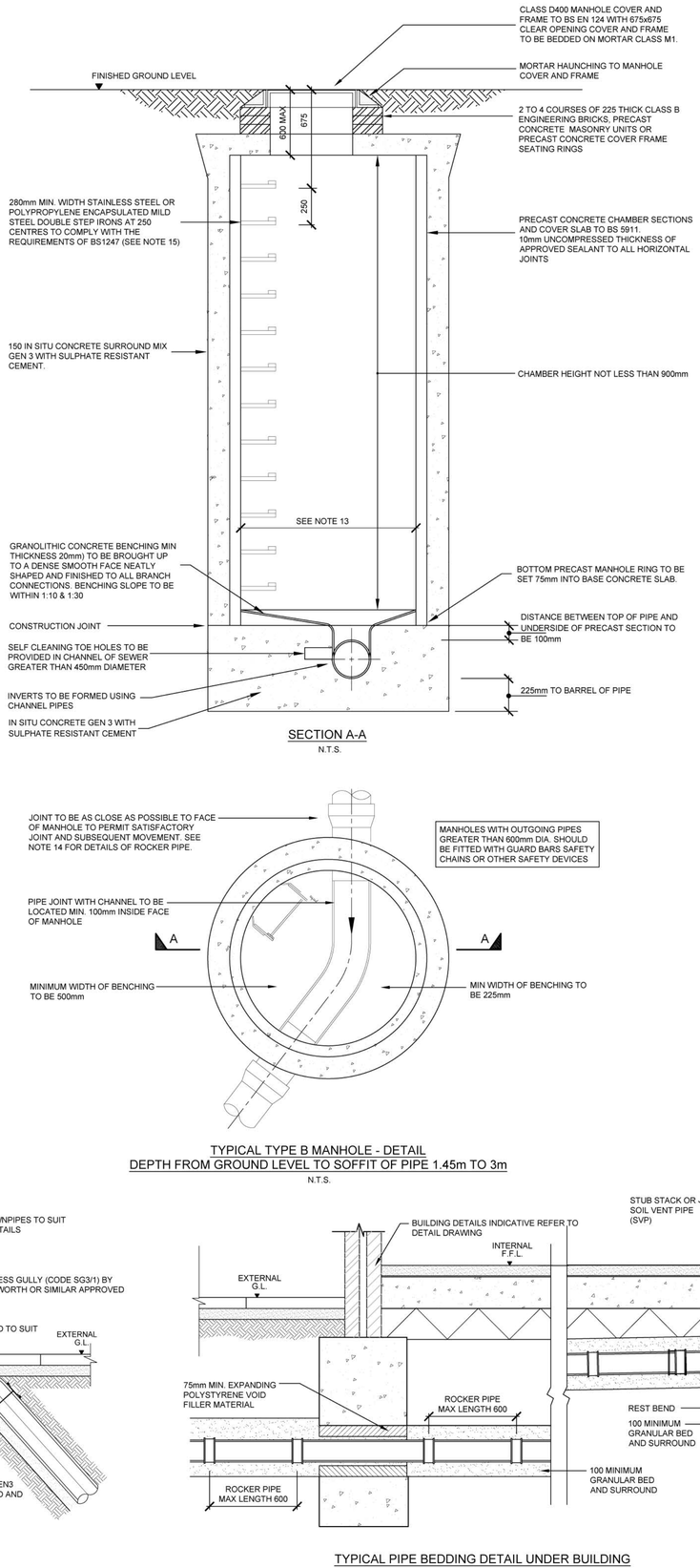

SECTION A-A

N.T.S.

TYPICAL TYPE B MANHOLE - DETAIL
DEPTH FROM GROUND LEVEL TO SOFFIT OF PIPE 1.45m TO 3m

N.T.S.

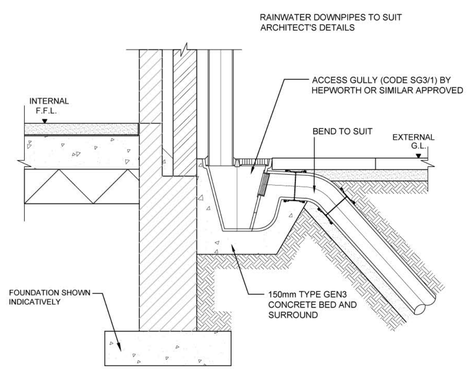

TYPICAL ACCESS GULLY TO RWP DETAIL

NTS

TYPICAL PIPE BEDDING DETAIL UNDER BUILDING

N.T.S.

TABLE APPLIES FOR TRENCHES UNDER CARRIAGEWAY AND IN LANDSCAPED AREAS			
PIPE DIA/TYPE	TRENCH WIDTH Bd	APPROX. EXT PIPE DIA Bc	BEDDING THICKNESS Y
150	600	190	100
225	700	280	100
300	850	380	100
450	1150	575	100
525	1200	670	125
600	1350	770	130
900	1900	1100	185

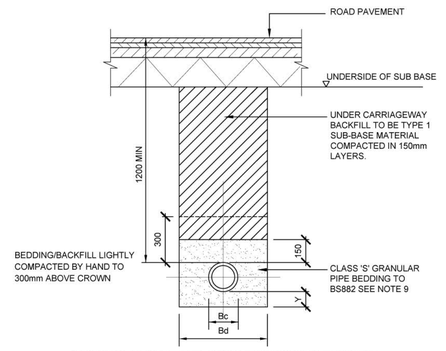

TYPICAL CROSS SECTION THROUGH DRAINAGE TRENCH UNDER CARRIAGEWAY/ADOPTABLE AREAS

SCALE 1:20

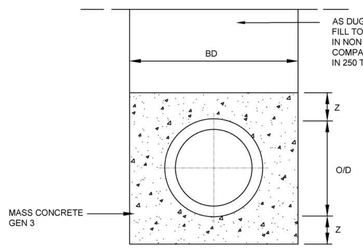

SECTION E - E

SCALE 1:25

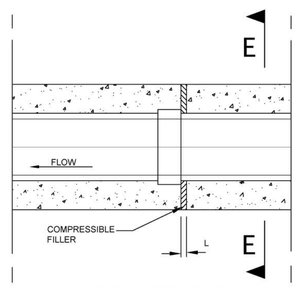

FLEXIBLE JOINT DETAIL CONCRETE BED AND SURROUND

N.T.S

A1

1. ALL DIMENSIONS IN MILLIMETRES UNLESS STATED OTHERWISE.
2. ALL PRIVATE DRAINAGE WORKS ARE TO COMPLY WITH THE REQUIREMENTS OF BS 752 BUILDING DRAINAGE AND BUILDING REGULATIONS 2000 APPROVED DOCUMENT H.
3. ALL MATERIALS, UNLESS SPECIFIED OTHERWISE, SHALL COMPLY WITH THE RELEVANT BRITISH STANDARD. SOURCES OF MATERIALS ARE TO BE AGREED WITH THE EMPLOYER'S REPRESENTATIVE/ENGINEER IN ADVANCE OF THE WORKS.
4. THIS DRAWING TO BE READ IN CONJUNCTION WITH ALL OTHER ENGINEERING DRAWINGS AND DETAILS AND CONTRACT DOCUMENTATION
5. ANY DISCREPANCIES IN THE DETAILS SHOWN TO BE REPORTED TO THE EMPLOYER'S REPRESENTATIVE/ENGINEER PRIOR TO CONSTRUCTION.
6. LOCATION AND LEVELS OF EXISTING DRAINAGE RUNS ARE BASED UPON SEWER RECORD PLANS AND MUST BE CHECKED ON SITE PRIOR TO THE COMMENCEMENT OF ANY DRAINAGE WORKS.
7. ALL EXISTING SERVICES TO BE LOCATED PRIOR TO THE COMMENCEMENT OF ANY DRAINAGE WORKS WHERE NECESSARY PROTECTION OR DIVERSIONS TO BE UNDERTAKEN TO AVOID CONFLICT WITH THE PROPOSED WORKS.
8. ALL ADOPTABLE DRAINAGE AND FITTINGS TO BE FLEXIBLY JOINTED CLAYWARE TO BS EN295 OR CONCRETE TO BS5911 PART 100. FLEXIBLY JOINTED UPVC PIPES AND FITTINGS TO WIS No 4-13-05 MAY BE USED FOR PRIVATE BUILDING DRAINAGE SYSTEMS ONLY.
9. TYPICAL PIPE BEDDING TO DRAINAGE WHERE DEPTH TO SOFFIT IS GREATER THAN 600mm IN LANDSCAPED AREAS AND GREATER THAN 1200mm IN ADOPTABLE HIGHWAYS AND 900mm IN OTHER TRAFFICKED AREAS IS TO BE CLASS S (I.E. 10-14mm GRADED IMPORTED GRANULAR BED AND SURROUND FOR PIPES UP TO 525Ø AND 20 - 40mm GRADED IMPORTED GRANULAR BED AND SURROUND FOR PIPES GREATER THAN 525Ø)
10. WHERE DEPTH TO SOFFIT OF DRAINAGE PIPEWORK IS LESS THAN 600mm IN LANDSCAPED AREAS AND LESS THAN 1200mm IN ADOPTABLE HIGHWAYS AND 900mm IN OTHER TRAFFICKED AREAS THEN PIPEWORK TO BE BEDDED AND SURROUNDED IN 150mm MINIMUM GRADE GEN 1 CONCRETE. COMPRESSIBLE MATERIAL, FLEXCELL OR SIMILAR APPROVED TO BE PROVIDED AT EVERY PIPE JOINT
11. BACKFILL TO DRAINAGE TRENCHES UNDER CARRIAGEWAYS TO BE TYPE 1 SUB-BASE MATERIAL, ELSEWHERE BACKFILL TO BE FREE DRAINING READILY COMPATIBLE MATERIAL, FREE FROM RUBBISH AND ORGANIC MATTER, FROZEN SOIL CLAY LUMPS AND LARGE STONES. TO BE COMPACTED IN LAYERS NOT EXCEEDING 150mm THICK.
12. CONCRETE MIXES INDICATED ON THIS DRAWING ARE DESIGNATED MIXES CONFORMING TO BS 8500-1, 2002.
13. A FLEXIBLE JOINT SHALL BE PROVIDED AS CLOSE AS IS FEASIBLE TO OUTSIDE FACE OF ANY STRUCTURE INTO WHICH A PIPE IS BUILT, COMPATIBLE WITH THE SATISFACTORY COMPLETION AND SUBSEQUENT MOVEMENT OF THE JOINT. THE LENGTH OF THE NEXT PIPE (ROCKER PIPE) AWAY FROM THE STRUCTURE SHALL BE AS SHOWN IN THE TABLE BELOW.

NOMINAL DIAMETER (mm)	EFFECTIVE LENGTH (m)
150-600	0.6
675-750	1.0
825 AND OVER	1.25

14. DRAINAGE CONNECTIONS FROM SVP'S TO BE LAID AT A GRADIENT NO FLATTER THAN 1:80. CONNECTIONS FROM STUB STACKS AND DIRECT CONNECTIONS ARE TO BE LAID AT A GRADIENT NO FLATTER THAN 1:40.
15. DRAINAGE TRENCHES NOT TO BE EXCAVATED LOWER THAN THE FOUNDATIONS OF ANY ADJACENT BUILDING OR WALL, UNLESS EITHER;
    - WHERE THE TRENCH IS WITHIN 1m OF THE FOUNDATION THE TRENCH IS TO BE FILLED WITH GRADE GEN1 CONCRETE TO THE LOWEST LEVEL OF THE ADJACENT FOUNDATION.
    - WHERE THE TRENCH IS FURTHER THAN 1m FROM THE BUILDING, THE TRENCH IS TO BE FILLED WITH GRADE GEN1 CONCRETE TO A LEVEL BELOW THE LOWEST LEVEL OF THE FOUNDATION EQUAL TO THE DISTANCE FROM THE FOUNDATION, LESS 150mm.

REVISION	DETAILS	DATE	DRAWN	CHK'D	APP'D
A	First Issue	11-10-17	AEP	AD	JG

CLIENT: Bagnall Heights Ltd

PROJECT: Extention to Bagnall Heights

DRAWING TITLE: Typical Drainage Details

Sheet 1 of 2

DRG No.	REV
MC10090-005	A
DRG SIZE: A1	SCALE: N.T.S.
DATE: 17-07-17	
DRAWN BY: AEP	CHECKED BY: AD
APPROVED BY: JG	

■ STOKE-ON-TRENT (HEAD OFFICE) TEL 01782 276700 WEB: WWW.WARDELL-ARMSTRONG.COM
☐ BIRMINGHAM ☐ CARDIFF ☐ CARLISLE ☐ CROYDON
☐ EDINBURGH ☐ GLASGOW ☐ LEIGH ☐ LONDON
☐ MANCHESTER ☐ NEWCASTLE UPON TYNE ☐ SHEFFIELD ☐ TAUNTON
wardell armstrong your earth our world

©Copyright Reserved