ARBORICULTURAL REPORT

Client: **Mrs Holland**

Site: **The Moorings**
Birchall Lane
Leek
ST13 5RA

Date: **31 August 2016**

Ref.: **THR16-67**

CONTENTS

1.0 Introduction

2.0 Limitations of report

3.0 Method

4.0 Trees and Construction: General overview

5.0 Protection of trees that are retained

6.0 Arboricultural methods

7.0 Wildlife: timing of operations

8.0 Planning considerations

9.0 Overall considerations for this site

10.0 Cascade Chart For Tree Quality Assessment: Table 1 BS 5837:2012

11.0 Appendix A: Tree Survey Schedule

12.0 Appendix B: Tree Protection Barriers

13.0 Appendix C: Tree Constraints Plan

1.0 Introduction

1.1 The purpose of this report is to be an aid to the design of the layout of the site. It identifies the better trees and specifies necessary protective measures that are required to keep the trees within the development. It may also give recommendations for remedial work that may be desirable in order to keep or improve the quality of the trees.

1.2 The survey complies with British Standard 5837:2012 *Trees in relation to design, demolition and construction – Recommendations*. All significant trees on the site have been inspected including any that may be on the boundary or on adjacent land that may be affected by any development. Included in the schedule of trees are the relevant areas of protection for the trees or the Root Protections Areas (RPAs). The relevant distance from each tree from which construction work should be excluded by the erection of a Protective Barrier is also listed.

1.3 The site visit was on 26 August 2016. Surveyor: Hugh Williams. The weather conditions: Sunny and dry.

2.0 Limitations of report

2.1 The trees were inspected from ground level only and no invasive tools were used.

2.2 Due to the changing nature of trees the report is valid for a period of 6 months for the condition and 2 years for all other data.

2.3 Trees may affect buildings by indirect influence of their roots on the substrate on which structures are built and by direct action on foundations, drains and other underground services. This report does not attempt to address these issues.

2.4 Trees are dynamic structures that can change rapidly and can never be guaranteed 100% safe: even if they were deemed safe on the day of the inspection they can sometimes suffer damage in adverse weather conditions. All trees should be inspected following any bad weather.

3.0 Method

3.1 The survey was undertaken from ground level and includes all individual significant trees shown in position and numbered on the site plan. Low grade or sapling trees may be grouped together as numbered groups e.g. G1. The following information is collected and given in a schedule;

- Number
- Tree Species (Common Name)
- Height in metres
- Stem diameter at 1.5 metre above ground level in millimetres.
- Crown Spread at compass points NSEW in metres.
- Crown clearance (height of lowest branch above ground) in metres.
- Age Class (Young, Middle-aged, Mature, Over mature and Veteran)
- Physiological Condition (Good, Fair, Poor or Dead). This is an overall assessment of the health of the tree based on leaf size, colour, density, annual growth increments and die-back or dead wood.
- Structural Condition (comments on decay, cavities, disease and other defects and issues that will affect its suitability for retention).
- Recommendations (These are based on the previous two categories and may include pruning or removal amongst other recommendations).
- Estimated Remaining Contribution (in years <10,10>20, 20>40 and 40+)
- Category Grading:

  U= Remove (unsuitable for retention due to its poor condition or less than 10 years contribution).

  A= High quality tree of good form with at least 40 years contribution.

  B= Moderate quality tree with 20>40 years contribution.

  C= Low quality tree (usually of poor form or condition). Also trees of less the 150mm stem diameter (these may be considered for relocation).

  Subcategory:

  1= mainly Arboricultural Merit

  2= mainly Landscape Merit

  3= mainly Cultural or Conservation Merit

4.0 Trees and Construction: General overview

4.1 Trees are large dynamic organisms that have basic requirements in order to survive. The obvious part of the tree is the trunks and branches with the leaves that are essential for survival and these are easily damaged by machines etc. This damage though is easily avoided and very obvious when it occurs. They have roots that anchor the tree into the ground but also take up moisture and oxygen as well as nutrients from the soil. Most tree roots are in the upper 0.5 metres of the soil and also extend well beyond the extent of the trees leafy canopy. Roots are easily damaged during any construction process although sometimes the immediate effect is not obvious. The main threats from construction work come from:

a) Compaction of the soil prevents gaseous exchange and water drainage.
b) Roots being severed or crushed.
c) Drainage being affected by alteration of levels and installation of trenches for services.
d) Physical damage to branches and trunks.
e) Poisoning of trees with contamination from fuel and oil leaks from machinery, run off from concrete mixers or other toxic materials used during construction.

The main consequences of the above in terms of damage are:

i) Compaction kills roots by preventing oxygen and water take-up.
ii) Severance can lead to pathogenic fungi invading the tree and in the worst cases, it can also lead to instability.
iii) Loss of vitality caused by the above can dramatically affect the life span of the tree.
iv) Damage to the crown can also lead to disease and instability in the worst cases.

5.0 Protection of the trees that are retained

5.1 BS 5837:2012 is intended to give recommendations to protect the trees during development and ensure their survival following the construction work. To achieve this there are two main considerations. The first is to protect the roots of the trees and the second to protect the upper parts of the tree, the trunk and branches.

5.2 The main tool to achieve the above is to create “Construction Exclusion Zones” around the trees. These are based on the “Root Protection Area” or RPA as calculated as required in BS 5837:2012. The RPAs for all the trees are included in the survey schedule. It is possible to vary the RPA from a circle to allow for specific site conditions.

5.3 To achieve an effective “Construction Exclusion Zone” (CEZ) it is necessary to erect a protective barrier along the edge of the RPA’s. The details of this fencing are shown in Figure 2, which is included as an appendix (B) to this report. The barrier should be erected a minimum distance from each tree. This minimum distance is provided as a radius in the Survey Schedule and shown on the plan. It is essential that this barrier is well anchored into the ground to prevent it being moved. It is acceptable to use “Herras” fencing in concrete or rubber feet and appropriately back braced in areas where site circumstances and the associated risk of damaging incursion into the RPA are low.

5.4 The Tree Protective Fencing should be installed before any construction work takes place. This includes demolition, site clearance and drainage work.

5.5 Notices should be fixed to the fencing warning personnel not to enter. They should read “CONSTRUCTION EXCLUSION ZONE – NO ACCESS”.

5.6 In some circumstances, with agreement from the LPA, it may be necessary to work within the RPA. In these circumstances the barrier may need to be realigned and ground protection used even for access on foot. If vehicular access is required then this will have to be specifically designed to prevent compaction and agreed in writing.

5.7 If the LPA agree to work within the RPA then any excavation work would have to be done by hand and usually supervised by the Arboriculturalist. Drives or access roads will also require a specific Method Statement and include “No-Dig” construction methods.

5.8 Some operations such as the delivery of large section of buildings or the use of cranes for construction or demolition will need to be carefully organised and supervised to avoid accidental damage to the branches and stems of the retained trees. It may be advisable where damage is inevitable to carry out facilitation pruning to avoid initial conflict. This would have to be agreed by the Arboriculturalist and the LPA.

5.9 Tree should not be used to support notices and under no circumstances should nails, screws or bolts be driven into the trees. Likewise trees should not be used to support cables or lights.

5.10 Care should be taken to avoid the discharge of any material that could contaminate the soil within 15 metres of any tree. This would include: washings from cement mixers, fuel or oil storage etc. This distance may need to be extended if the ground slopes towards the tree.

6.0 Arboricultural Methods

6.1 The Arboriculturalist or the LA Tree Officer should be consulted if there are any unforeseen issues in relation to any tree on site including any unexpected work within the Root Protection Areas.

6.2 All tree work should be carried out by highly skilled professionals and it is recommended that contractors are selected from the Approved List of Arboricultural Association Contractors. This is obtained from www.trees.org.uk

6.3 All tree work should be carried out to the latest standards based on BS 3998: 2010 ‘Recommendations for Tree Work’.

6.4 It is also advisable to draw up a final Arboricultural Method Statement and Tree Protection Plan to be agreed with the LPA.

7.0 Wildlife and Timing of Operations

7.1 Many animals including bats and birds are given special protection under the Wildlife and Countryside Act 1981(as amended) and the Countryside and Rights of Way Act 2001 amongst other legislation.

7.2 **Bats**. It is an offence to "intentionally or recklessly disturb a bat" or "damage, destroy or block the access to the resting place of any bat". An assessment of trees on the site for "suitability for bats" is an essential part of the pre-planning stage. If bats are found or even reported to have used the trees for roosts then it is essential that a specialist in this field is contacted for advice. Natural England should be contacted on 0300 060 6000 or through www.naturalengland.org.uk for details of suitable specialists. It may be that a European Protected Species Habitat Regulations Licence is required before work can continue. Following advice, it is usual that work to trees with potential for bat roosts is best done from late August to early October. March through to April is also suitable but there may be conflict with nesting birds. (see below)

7.3 **Birds**. It is an offence to disturb, injure or kill any bird whilst it is at or building a nest. This includes damage to or removal of the actual nest whilst it is in use or being built. Tree works that could lead to the above should therefore be avoided during the months of late March through until August.

7.4 To avoid problems with either, it would be advisable to programme all necessary site clearance work and tree pruning during August to late October**.**

8.0 Planning Considerations

8.1 Full planning consent that includes any proposed tree works usually overrides the requirement to get specific permission even for trees that are within a Conservation Area or protected by a Tree Preservation Order.

8.2 If work is to be carried out prior to planning consent being sought, then it may be necessary to apply for permission separately. In a Conservation Area it is a requirement to give Six Weeks Written Notice of any intended works. In the case of a TPO an application is required to the LPA on a 1APP form; in this case it may take 8-10 weeks before permission is given. It should be noted that permission is not required from the LPA to remove "Dead or Dangerous" trees although it is always best to inform the LPA of your intentions and supply suitable evidence to support your actions.

9.0 Overall Considerations for this site

9.1 I looked at a total of 44 trees on this site and 1 hedge which forms the boundary on the South Western edge of the site.

9.2 Generally the trees are of fairly poor quality as many have been topped or badly pruned in the past. There are 3 trees which are just outside the site which may pose some slight constraints with RPAs that encroach into the site. Only one of these, T43 Category B, was considered good enough to be categorised higher than C.

9.3 Two trees T16 Norway Spruce andT35 Deodar Cedar were put into Category B because they are in good condition and still have at least 20 years of useful life. The remaining trees were all considered to be of poor quality and generally have less than 10 years of useful life.

9.4 The Hedgerow H1 is a mixed hedge which has not been cut for many years. It could be retained if required but would have to be cut several times to get it back into shape.

9.5 All retained trees will require protection during the construction work to make sure that they are not damaged. This can be achieved by the use of barriers to exclude vehicles, details of this are found in section 5 of this report.

9.6 The exact position of the Tree Protection Barriers should be discussed on site with the agreement of the LPA Tree Officer. It is essential that they are erected before any work starts on the site.

Tree Heritage Ltd

H.E. Williams

H.E. Williams

31/08/2016

Bought by Mr Hugh Williams, Tree Heritage Ltd, on 12/04/2012 16:24 Latest version. Not to be distributed/networked. For multi-user access www.bsigroup.com/license © BSI
Licensed copy, Individual user, Company, Version correct as of 11.04.2012, (c) The British Standards Institution 2012

Table 1 **Cascade chart for tree quality assessment**

Category and definition	Criteria (including subcategories where appropriate)			Identification on plan
Trees unsuitable for retention (see Note)				
Category U Those in such a condition that they cannot realistically be retained as living trees in the context of the current land use for longer than 10 years	• Trees that have a serious, irremediable, structural defect, such that their early loss is expected due to collapse, including those that will become unviable after removal of other category U trees (e.g. where, for whatever reason, the loss of companion shelter cannot be mitigated by pruning) • Trees that are dead or are showing signs of significant, immediate, and irreversible overall decline • Trees infected with pathogens of significance to the health and/or safety of other trees nearby, or very low quality trees suppressing adjacent trees of better quality *NOTE Category U trees can have existing or potential conservation value which it might be desirable to preserve; see **4.5.7**.*			See Table 2
	1 Mainly arboricultural qualities	**2 Mainly landscape qualities**	**3 Mainly cultural values, including conservation**	
Trees to be considered for retention				
Category A **Trees of high quality** with an estimated remaining life expectancy of at least 40 years	Trees that are particularly good examples of their species, especially if rare or unusual; or those that are essential components of groups or formal or semi-formal arboricultural features (e.g. the dominant and/or principal trees within an avenue)	Trees, groups or woodlands of particular visual importance as arboricultural and/or landscape features	Trees, groups or woodlands of significant conservation, historical, commemorative or other value (e.g. veteran trees or wood-pasture)	See Table 2
Category B **Trees of moderate quality** with an estimated remaining life expectancy of at least 20 years	Trees that might be included in category A, but are downgraded because of impaired condition (e.g. presence of significant though remediable defects, including unsympathetic past management and storm damage), such that they are unlikely to be suitable for retention for beyond 40 years; or trees lacking the special quality necessary to merit the category A designation	Trees present in numbers, usually growing as groups or woodlands, such that they attract a higher collective rating than they might as individuals; or trees occurring as collectives but situated so as to make little visual contribution to the wider locality	Trees with material conservation or other cultural value	See Table 2
Category C **Trees of low quality** with an estimated remaining life expectancy of at least 10 years, or young trees with a stem diameter below 150 mm	Unremarkable trees of very limited merit or such impaired condition that they do not qualify in higher categories	Trees present in groups or woodlands, but without this conferring on them significantly greater collective landscape value; and/or trees offering low or only temporary/transient landscape benefits	Trees with no material conservation or other cultural value	See Table 2

© The British Standards Institution 2012

Site: The Moorings
Surveyed by: Hugh Williams
Date: 26/08/16

Tree Heritage Ltd, 100 North St, Leek, Staffs, ST13 8DQ
T: 01538 384019 E: info@treeheritage.co.uk

APPENDIX A: TREE SURVEY SCHEDULE

KEY:

Measurements	Life Stage	Physiological Condition	Category Grading	Symbols
Height - *Metres* Stem Diameter - *Millimetres at 1.5m above ground level* Branch Spread - *Metres (North, South, East and West)* Crown Clearance - *Metres* RPA Radius - *Metres* Estimated Remaining Contribution - *Years* FSB - First Significant Branch - *Metres*	Y - *Young* SM - *Semi-Mature* EM - *Early Mature* M - *Mature* OM - *Over-Mature* V - *Veteran*	G - *Good* F - *Fair* P - *Poor* D - *Dead*	A - *High (green)* B - *Moderate (blue)* C - *Low (grey)* *U - Poor/Trees for removal (red)* **Sub-Categories:** 1 - *Mainly Arboricultural value* 2 - *Mainly Landscape value* 3 - *Mainly Cultural value*	< - *Less than* ~ - *Approximately* > - *Greater than*
RPA - *Root protection area (equivalent to a circle with a radius 12x the stem diameter measured at 1.5m above ground level)* *# denotes tree in adjacent property.*				

Site: The Moorings
Surveyed by: Hugh Williams
Date: 26/08/16

Tree Heritage Ltd, 100 North St, Leek, Staffs, ST13 8DQ
T: 01538 384019 E: info@treeheritage.co.uk

Tree Ref.	Species	Height	Stem Diameter	Branch Spread				Crown Clearance	FSB Height + Direction	Life Stage	Phys. Condition	Structural Condition	Recommendations	Estimated Remaining Contribution	Category Grading	RPA Radius
				N	S	E	W									
T1	Flowering Cherry(Prunus serrulata)	1.75	210	2	2	2	2	0.5	1(NE)	OM	P	Pollard. Decay present on stem. Major deadwood in crown.	Remove tree.	<10	U	
T2	Silver Birch(Betula pendula)	14	310	2	5	5	5	2	3(S)	M	F	Major deadwood in crown. Unbalanced crown shape.		10+	C1	3.72
T3	Silver Birch(Betula pendula)	14	350	3	5	5	5	2	3(S)	M	F	Major deadwood in crown. Unbalanced crown shape. Tree has been topped in the past and there is decay present in top of stem.		<10	U	4.2
T4	Silver Birch(Betula pendula)	13	230	3	5	5	5	2	3(S)	M	F	Major deadwood in crown. Unbalanced crown shape. Tree has been topped in the past and there is decay present in top of stem.		<10	U	2.76
T5	Silver Birch(Betula pendula)	11	230	3	3	3	3	2	3(S)	M	F	Major deadwood in crown. Unbalanced crown shape.		10+	C1	2.76

Site: The Moorings
Surveyed by: Hugh Williams
Date: 26/08/16

Tree Heritage Ltd, 100 North St, Leek, Staffs, ST13 8DQ
T: 01538 384019 E: info@treeheritage.co.uk

Tree Ref.	Species	Height	Stem Diameter	Branch Spread				Crown Clearance	FSB Height + Direction	Life Stage	Phys. Condition	Structural Condition	Recommendations	Estimated Remaining Contribution	Category Grading	RPA Radius
				N	S	E	W									
T6	Norway Spruce(Picea abies)	7	150	4	4	4	4	2	1(S)	EM	F	Poor shape & form. This tree has been topped in the past.		10+	C1	1.8
T7	Bhutan Pine(Pinus wallichiana)	8	410	6	2	6	6	2	3(N)	EM	P	Poor pruning cuts. Major deadwood in crown. Unbalanced crown shape. Tree has been topped in the past.		<10	U	4.92
T8	Lawson Cypress(Chamaecyparis lawsoniana)	12	260	2	2	2	2	3	3(N)	M	F	Major deadwood in crown. Crown distorted due to group pressure. Golden.		10+	C1	3.12
T9	Whitebeam(Sorbus aria)	12	330	2	2	5	5	2	1.2(W)	M	F	Major deadwood in crown. Unbalanced crown shape. Crown distorted due to group pressure.		10+	C1	3.96

Site: The Moorings
Surveyed by: Hugh Williams
Date: 26/08/16

Tree Heritage Ltd, 100 North St, Leek, Staffs, ST13 8DQ
T: 01538 384019 E: info@treeheritage.co.uk

Tree Ref.	Species	Height	Stem Diameter	Branch Spread				Crown Clearance	FSB Height + Direction	Life Stage	Phys. Condition	Structural Condition	Recommendations	Estimated Remaining Contribution	Category Grading	RPA Radius
				N	S	E	W									
T10	Copper Beech(Fagus sylvatica 'Purpurea')	14	370	5	2	5	2	5	5(E)	EM	F	Included bark present in main fork. Dieback in crown. Major deadwood in crown. Unbalanced crown shape. Crown distorted due to group pressure.		10+	C1	4.44
T11	Bhutan Pine(Pinus wallichiana)	15	590	2	8	8	5	2	2(S)	EM	F	Major deadwood in crown. Unbalanced crown shape. Crown distorted due to group pressure.		20+	C1	7.08
T12	Lawson Cypress(Chamaecyparis lawsoniana)	15	270	2	2	2	2	2	3(N)	EM	F	Crown distorted due to group pressure.		10+	C1	4.58
T13	Lawson Cypress(Chamaecyparis lawsoniana)	15	310	2	2	2	2	2	3(N)	EM	F	Crown distorted due to group pressure.		10+	C1	5.26
T14	Lawson Cypress(Chamaecyparis lawsoniana)	15	290	2	2	2	2	2	3(N)	EM	F	Crown distorted due to group pressure. Blue.		10+	C1	4.92
T15	Common Oak(Quercus robur)	8	300	3.5	3.5	3.5	3.5	2	2(N)	EM	F	Epicormics on stem. This tree has been topped in the past.		20+	C1	3.6

Site: The Moorings
Surveyed by: Hugh Williams
Date: 26/08/16

Tree Heritage Ltd, 100 North St, Leek, Staffs, ST13 8DQ
T: 01538 384019 E: info@treeheritage.co.uk

Tree Ref.	Species	Height	Stem Diameter	Branch Spread				Crown Clearance	FSB Height + Direction	Life Stage	Phys. Condition	Structural Condition	Recommendations	Estimated Remaining Contribution	Category Grading	RPA Radius
				N	S	E	W									
T16	Norway Spruce(Picea abies)	14	400	5	5	5	5	1	2(N)	EM	G	This tree has been topped in the past.		20+	B1	4.8
T17	Wild Cherry(Prunus avium)	6	90	3	3	3	3	1	0.5(N)	SM	F	Low bud/leaf density.		10+	C1	1.08
T18	Lawson Cypress(Chamaecyparis lawsoniana)	14	380	2	2	2	2	5	3(N)	EM	F	Crown distorted due to group pressure.		10+	C1	4.56
T19	Lawson Cypress(Chamaecyparis lawsoniana)	8	260	2	2	2	2	2	2(N)	OM	F	Dieback in crown. Low bud/leaf density. Unbalanced crown shape. Crown distorted due to group pressure.		<10	C1	3.12
T20	Lawson Cypress(Chamaecyparis lawsoniana)	8	260	2	2	2	2	2	2(N)	OM	F	Dieback in crown. Low bud/leaf density. Unbalanced crown shape. Crown distorted due to group pressure.		<10	C1	3.12
T21	Lawson Cypress(Chamaecyparis lawsoniana)	8	190	2	2	2	2	2	2(N)	OM	F	Dieback in crown. Low bud/leaf density. Unbalanced crown shape. Crown distorted due to group pressure.		<10	C1	2.28

Site: The Moorings
Surveyed by: Hugh Williams
Date: 26/08/16

Tree Heritage Ltd, 100 North St, Leek, Staffs, ST13 8DQ
T: 01538 384019 E: info@treeheritage.co.uk

Tree Ref.	Species	Height	Stem Diameter	Branch Spread				Crown Clearance	FSB Height + Direction	Life Stage	Phys. Condition	Structural Condition	Recommendations	Estimated Remaining Contribution	Category Grading	RPA Radius
				N	S	E	W									
T22	Holly(Ilex aquifolium)	8	150	2	2	2	2	2	2(S)	EM	F	Crown distorted due to group pressure.		10+	C1	1.8
T23	Lawson Cypress(Chamaecyparis lawsoniana)	16	420,460	3	3	3	3	3	2(S)	M	F	Stem divides below 1.5m. Included bark present in main fork. Crown distorted due to group pressure.		10+	C1	7.48
T24	Lawson Cypress(Chamaecyparis lawsoniana)	8	280	2	2	2	2	2	2(N)	OM	F	Dieback in crown. Low bud/leaf density. Unbalanced crown shape. Crown distorted due to group pressure.		<10	C1	3.36
T25	Flowering Cherry(Prunus 'Kanzan')	6	260	5	5	5	5	2	0.5(N)	OM	P	Dieback in crown. Low bud/leaf density. Major deadwood in crown. Unbalanced crown shape.		10+	U	5.4
T26	Lawson Cypress(Chamaecyparis lawsoniana)	12	330	2	2	2	2	2	2(N)	M	F	Crown distorted due to group pressure.		10+	C1	3.96
T27	Flowering Cherry(Prunus 'Kanzan')	8	180	3	3	3	3	2	1(W)	OM	P	Dieback in crown. Low bud/leaf density. Major deadwood in crown.		<10	U	2.16

Site: The Moorings
Surveyed by: Hugh Williams
Date: 26/08/16

Tree Heritage Ltd, 100 North St, Leek, Staffs, ST13 8DQ
T: 01538 384019 E: info@treeheritage.co.uk

Tree Ref.	Species	Height	Stem Diameter	Branch Spread				Crown Clearance	FSB Height + Direction	Life Stage	Phys. Condition	Structural Condition	Recommendations	Estimated Remaining Contribution	Category Grading	RPA Radius
				N	S	E	W									
T28	Flowering Cherry(Prunus 'Kanzan')	8	420	5	5	5	5	2	1(W)	OM	P	Decay present at base. Decay present on stem. Cavity on stem. Dieback in crown. Low bud/leaf density. Major deadwood in crown.	Remove tree.	<10	U	5.04
T29	Lawson Cypress(Chamaecyparis lawsoniana)	14	330	3	3	3	3	2	2(E)	M	F	Crown distorted due to group pressure. Blue.		10+	C1	3.96
T30	Lawson Cypress(Chamaecyparis lawsoniana)	14	460	3	3	3	3	2	2(E)	M	F	Crown distorted due to group pressure. Golden.		10+	C1	5.52
T31	Flowering Cherry(Prunus 'Kanzan')	4	240	2	2	2	2	1	1.5(E)	OM	P	Decay present on stem. Bacterial canker on stem. Poor pruning cuts. This tree has been topped in the past.		<10	U	2.88
T32	Lawson Cypress(Chamaecyparis lawsoniana)	14	400	3	3	3	3	2	2(N)	M	F	Crown distorted due to group pressure. Blue.		10+	C1	4.8
T33	Variegated Holly(Ilex aquifolium 'Gold')	8	260	3	3	3	3	2	2(S)	EM	F	Crown distorted due to group pressure.		10+	C1	3.12
T34	Lawson Cypress(Chamaecyparis lawsoniana)	12	350	3	3	3	3	2	2(N)	M	F	Crown distorted due to group pressure. Blue.		10+	C1	4.2

Site: The Moorings
Surveyed by: Hugh Williams
Date: 26/08/16

Tree Heritage Ltd, 100 North St, Leek, Staffs, ST13 8DQ
T: 01538 384019 E: info@treeheritage.co.uk

Tree Ref.	Species	Height	Stem Diameter	Branch Spread				Crown Clearance	FSB Height + Direction	Life Stage	Phys. Condition	Structural Condition	Recommendations	Estimated Remaining Contribution	Category Grading	RPA Radius
				N	S	E	W									
T35	Deodar(Cedrus deodora)	12	560	5	3	5	7	2	3(N)	M	F	Major deadwood in crown. Unbalanced crown shape. Crown distorted due to group pressure. This tree has been topped in the past.		20+	B1	9.5
T36	Lawson Cypress(Chamaecyparis lawsoniana)	11	320	3	3	3	3	2	2(N)	M	F	Crown distorted due to group pressure. Golden.		10+	C1	3.84
T37	Wild Cherry(Prunus avium)	11	310	5	5	5	5	2	2(NE)	OM	D	Low vitality. Declining. Low bud/leaf density. Major deadwood in crown.		<10	U	3.72
T38	Norway Spruce(Picea abies)	6	150	2	2	2	2	2	2(N)	EM	F	Crown distorted due to group pressure.		10+	C1	1.8
T39	Norway Spruce(Picea abies)	12	290	3	3	3	3	2	2(N)	EM	F	Crown distorted due to group pressure.		10+	C1	3.48
T40 #	Norway Spruce(Picea abies)	10	310	4	4	4	4	2	2(N)	EM	F	Crown distorted due to group pressure.		10+	C1	3.72
T41 #	Sitka Spruce(Picea sitchensis)	12.5	470	5	5	5	5	2	2(N)	EM	F	Crown distorted due to group pressure.		10+	B1	5.64

Site: The Moorings
Surveyed by: Hugh Williams
Date: 26/08/16

Tree Heritage Ltd, 100 North St, Leek, Staffs, ST13 8DQ
T: 01538 384019 E: info@treeheritage.co.uk

Tree Ref.	Species	Height	Stem Diameter	Branch Spread				Crown Clearance	FSB Height + Direction	Life Stage	Phys. Condition	Structural Condition	Recommendations	Estimated Remaining Contribution	Category Grading	RPA Radius
				N	S	E	W									
T42	Wild Cherry(Prunus avium)	10	400	5	5	5	5	2	1(N)	OM	P	Low vitality. Declining. Low bud/leaf density.		10+	C1	4.8
T43 #	Horse Chestnut(Aesculus hippocastanum)	9	260	3	3	3	3	2	1.5(N)	EM	F	Low vitality. Exudation on stem.		10+	C1	3.12
T44	Flowering Cherry(Prunus 'Kanzan')	6	270	4	4	4	4	1	2(W)	M	F	Low vitality. Declining. Included bark present in main fork. Major deadwood in crown.		10+	C1	3.24
H1	Corkscrew Hazel, Hawthorn, Damson, Lilac(Corylus avellana Contorta, Crataegus monogyna, Prunus domestica, Syringa spp.)															

Figure 2 **Default specification for protective barrier**

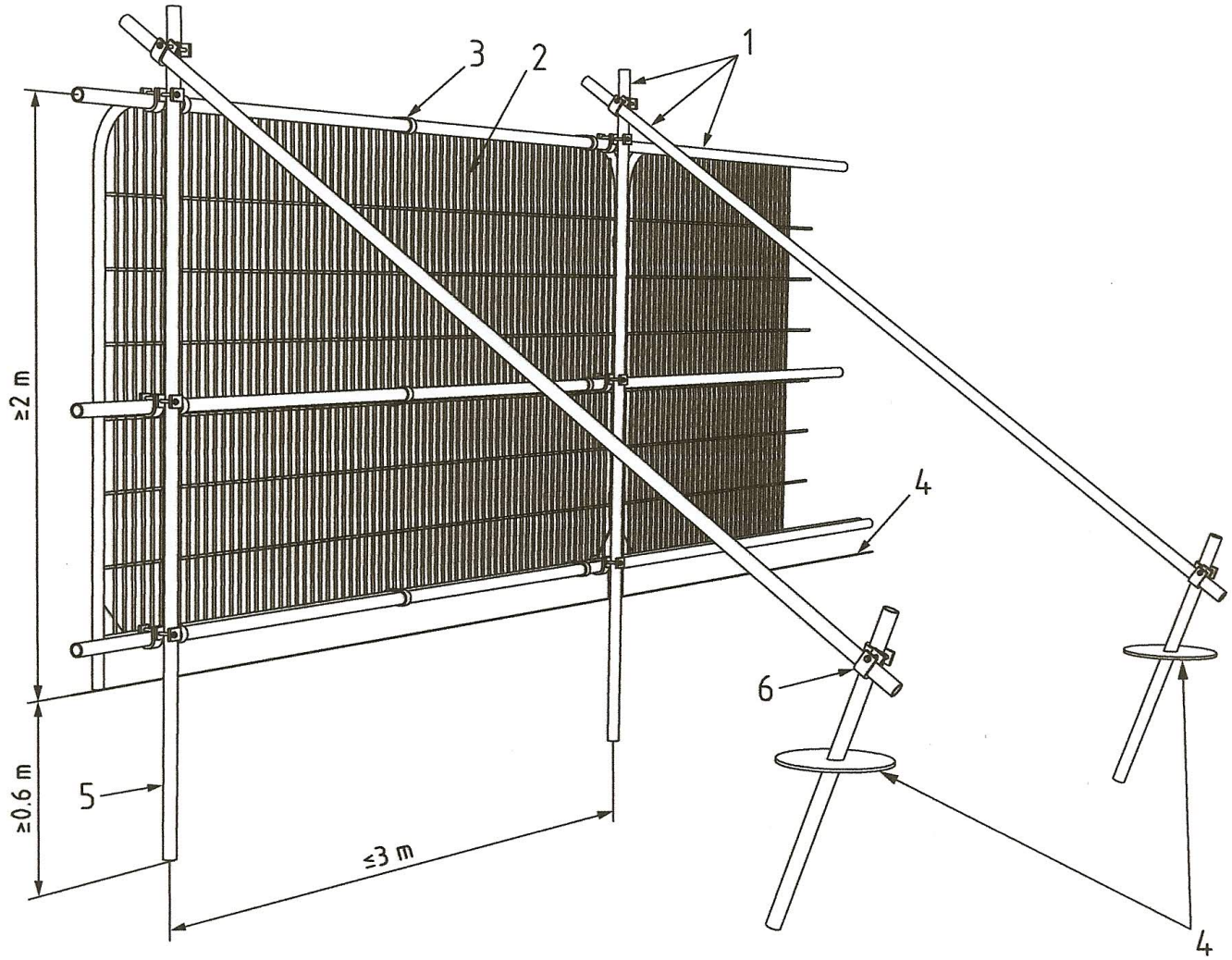

Key

1 Standard scaffold poles
2 Heavy gauge 2 m tall galvanized tube and welded mesh infill panels
3 Panels secured to uprights and cross-members with wire ties
4 Ground level
5 Uprights driven into the ground until secure (minimum depth 0.6 m)
6 Standard scaffold clamps

Figure 3 **Examples of above-ground stabilizing systems**

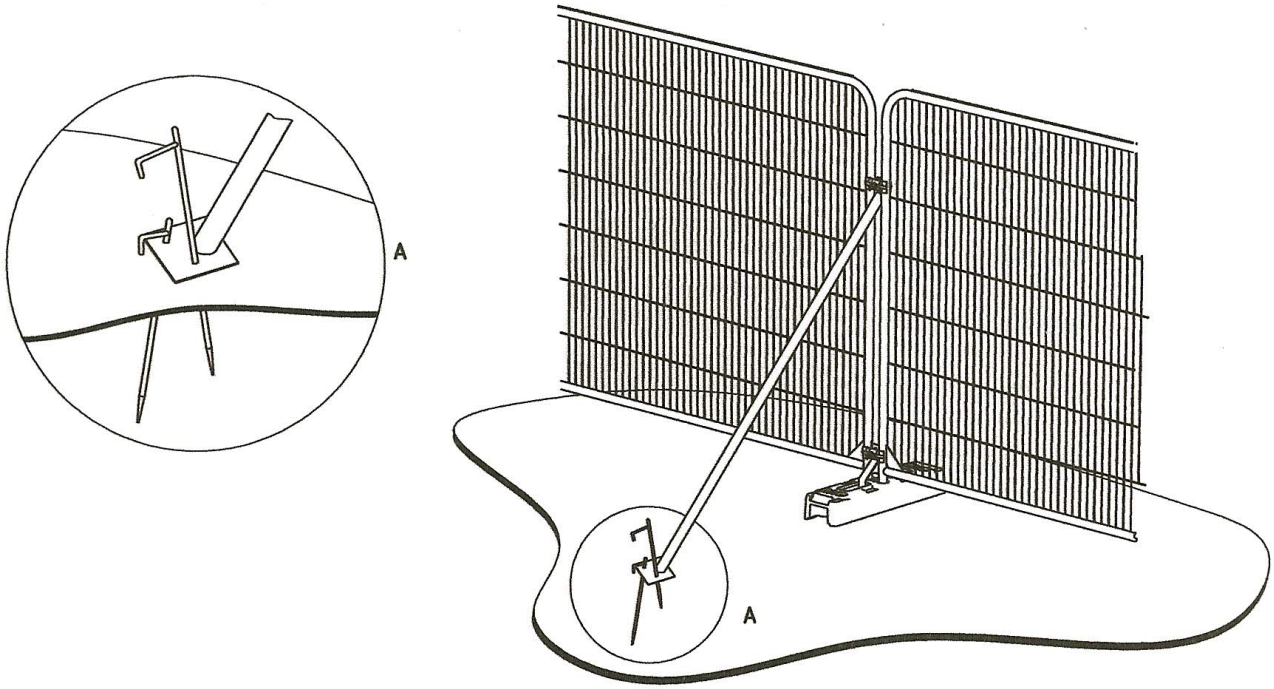

a) Stabilizer strut with base plate secured with ground pins

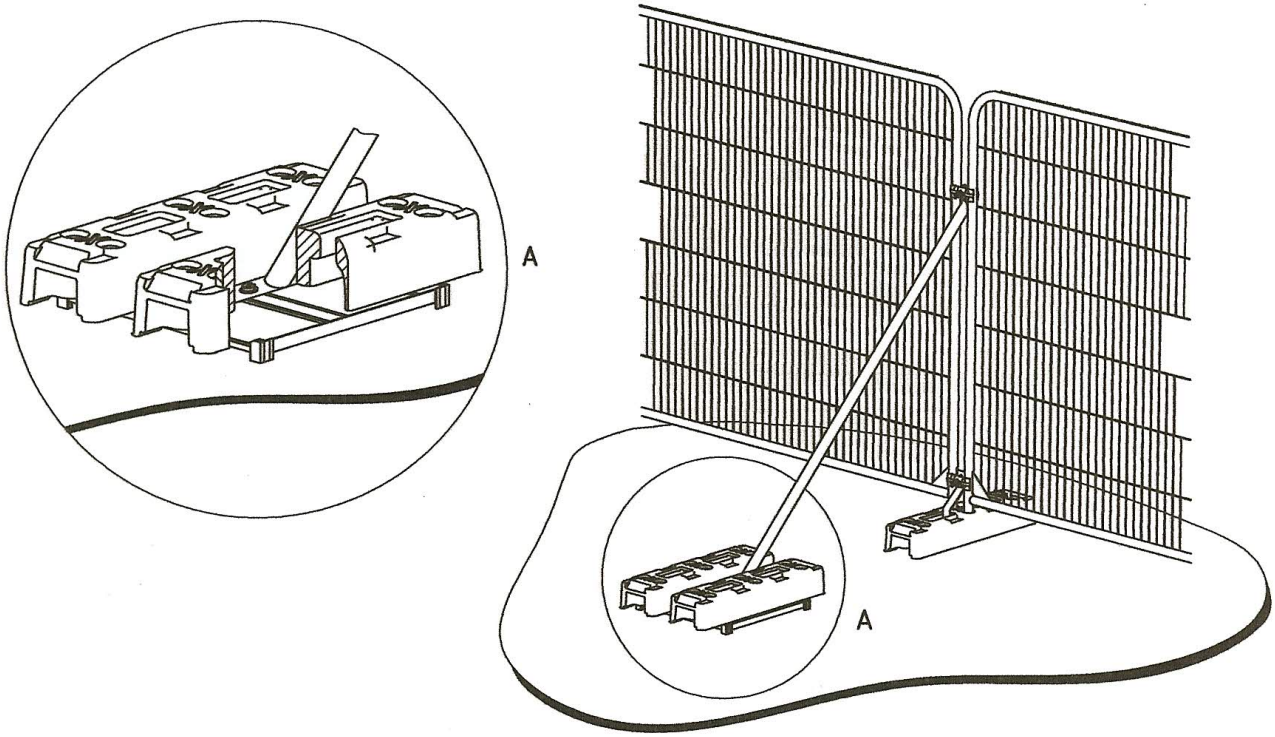

b) Stabilizer strut mounted on block tray

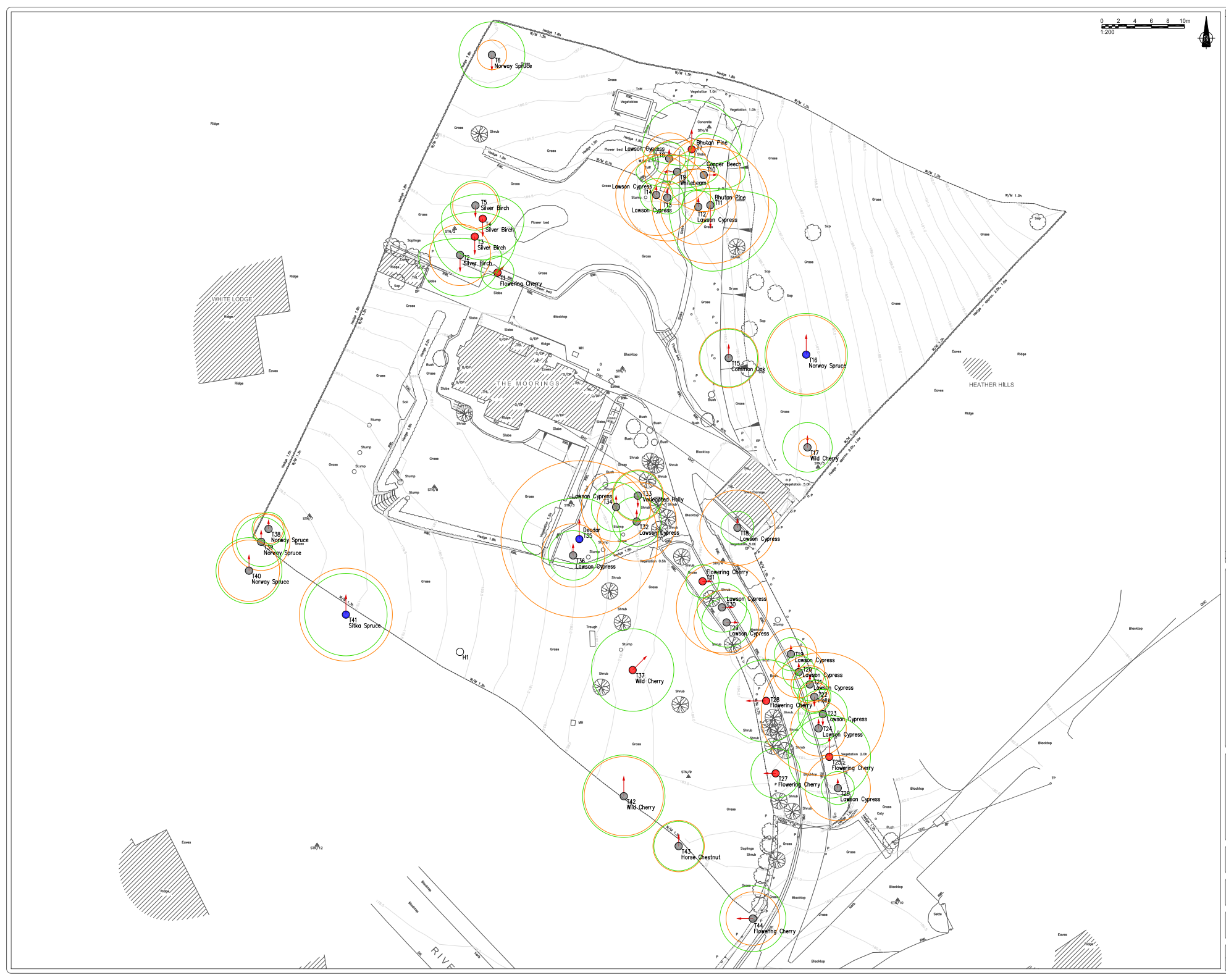

Notes:

1. Do not scale off this drawing. Tree canopies are symbolic only and are representative of the average spread. This may not represent the true outline. Note that the tree stem may not sit centrally to canopy. The stem is not shown to scale - see schedule.
2. The original of this drawing was produced in colour – a monochrome copy should not be relied upon.

Rev:	Date:	Status/Amendments:	By:

Key:

- Category A Tree
- Category B Tree
- Category C Tree
- Category U Tree
- Branch Spread
- Tree to be Removed
- Root Protection Area (RPA)
- First Significant Branch Direction
- Root Protective Barrier
- Special Measures
- Tree Shadow

GROWING SINCE 1982
TREE HERITAGE
Tree Heritage Ltd, 100 North Street,
Leek, Staffordshire, ST13 8DQ
Telephone: 01538 384019
treeheritage.co.uk Info@treeheritage.co.uk

Client: Mrs K Holland

Project: The Moorings, Birchall Lane, Leek

Drawing Title: Tree Constraints Plan

Scale:	Paper Size:	Date Created:
1:200	A1	31/08/16
Drawing Number: THL-0440		Drawing Revision: 1