Dimensions – New Potting Shed

Paper Size A4
Scale 1cm=1m (1:100)

Plan View

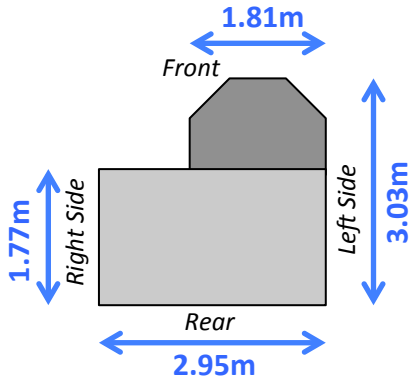

Front Elevation

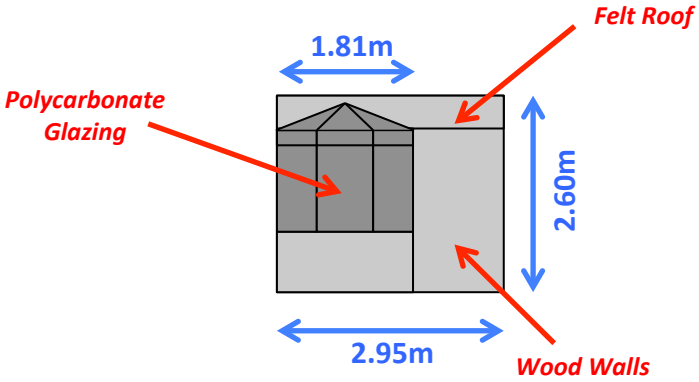

Right Side Elevation

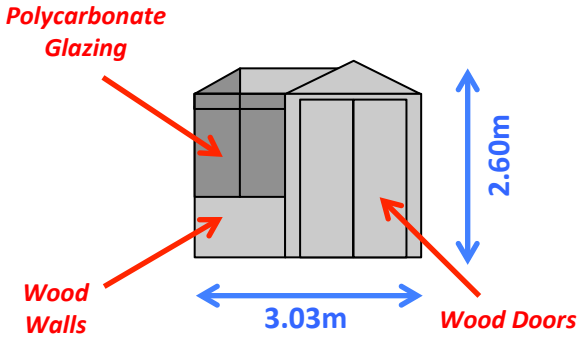

Rear Elevation

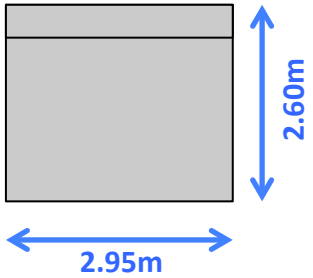

Left Side Elevation

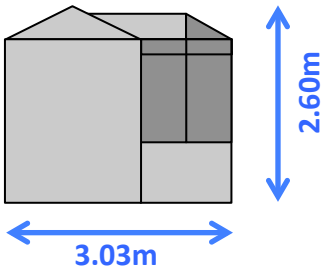

The potting shed comprises a shiplap 1.77 x 2.95 m shed with a protruding extension which is part polycarbonate glazed as shown