THIS DRAWING HAS BEEN PREPARED FOR THE PURPOSE OF OBTAINING PLANNING / BUILDING REGULATIONS APPROVAL ONLY. THE SITE BOUNDARIES MARKED ON THIS DRAWING ARE INDICATIVE ONLY. CLIENT TO TAKE FULL REASONABILITY FOR DEFINING THE EXACT POSITION OF SITE BOUNDARIES PRIOR TO START OF WORK, AND FOR COMPLYING WITH ALL STATUTORY OBLIGATION UNDER THE PARTY WALL ACT.

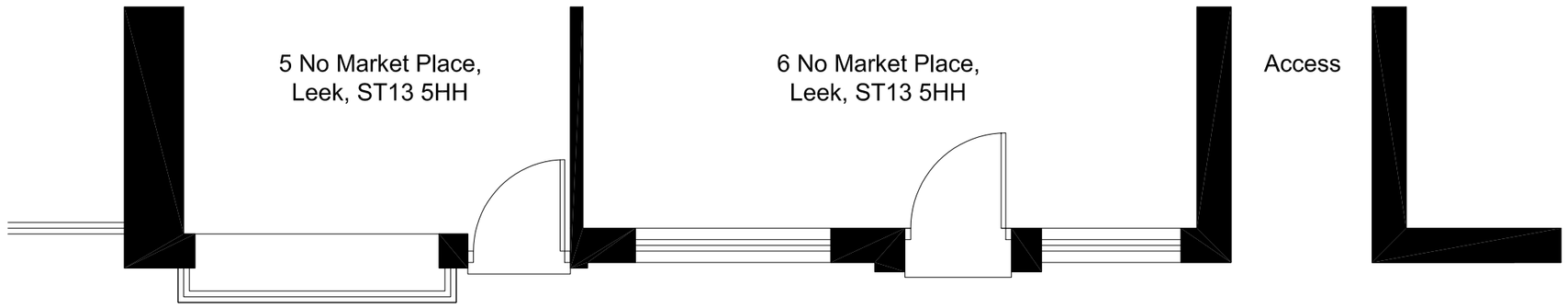

Ground Floor Layout (Part Plan Only) 1:50



Front Elevation 1:50 (No 5 - 6 Market Place, Leek, ST13 5HH)



Front Veiw Existing Property

Beer Dock Logo indicating style, colour and appearance of wall mounted sign

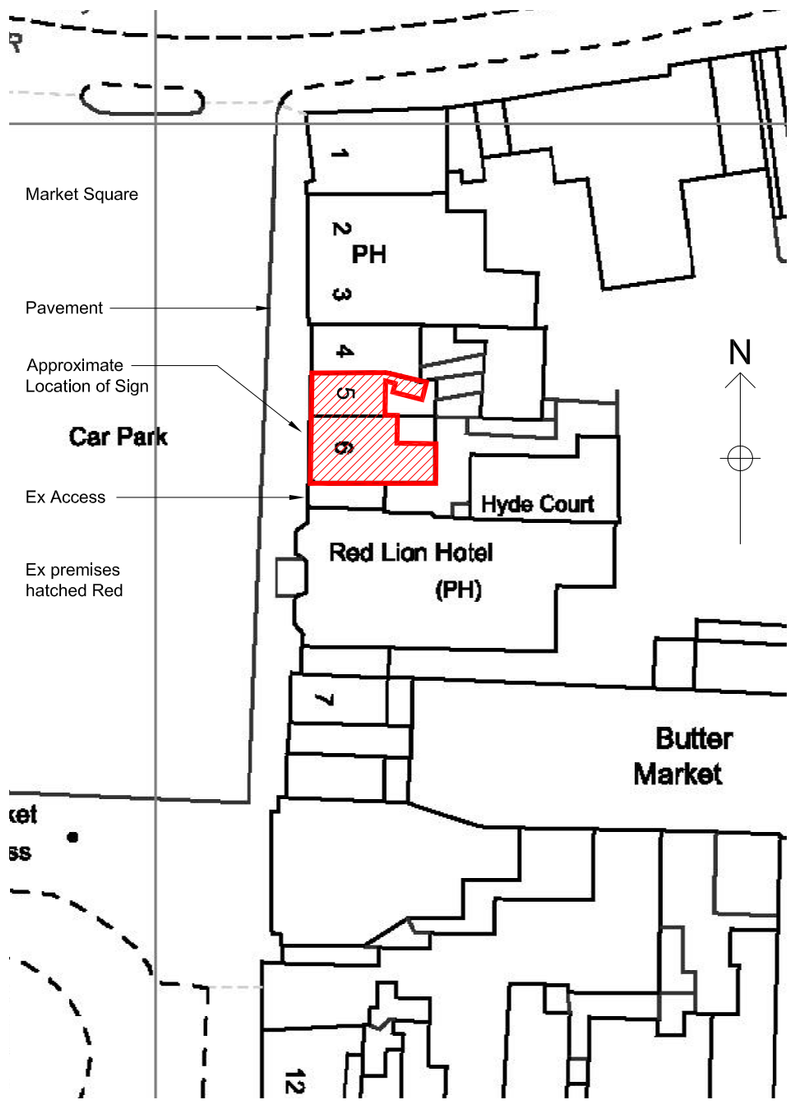

Site / Block Plan 1:500

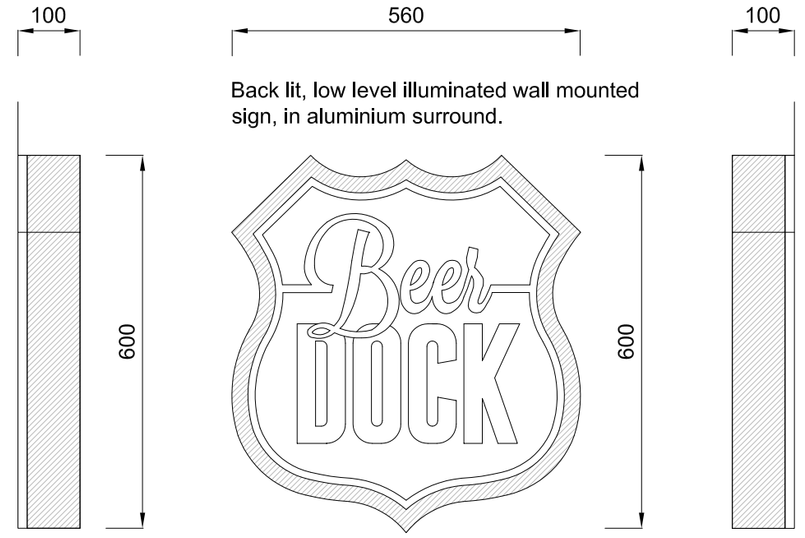

Side Elevation 1:10 Front Elevation 1:10 Side Elevation 1:10

Wall Mounted Sign Details 1:10

(All Dims Approx. Only)

Wall Mounted sign positioned 2580mm above pavement level

Planning Issue Only

All dimensions, construction details and specification details contained on this drawing are for planning purposes only. All are to be checked and agreed on site with Client / Building Inspector as applicable prior to construction.

Rev	Comment	Date

ALL DIMENSIONS & LEVELS INDICATED ON THIS DRAWINGS ARE INDICATIVE ONLY. ALL ARE TO BE CHECKED ON SITE BY THE CONTRACTOR PRIOR TO CONSTRUCTION. CONTRACTOR TO TAKE FULL RESPONSIBILITY FOR ALL TECHNICAL DETAILS, ARRANGEMENTS, LAYOUTS AND SPECIFICATION DETAILS. ALL DETAILS ARE TO BE CHECKED AND APPROVED BY BUILDING CONTROL PROIR TO CONSTRUCTION.

*Building Plans **Drawn** & **Submitted** for Planning and Building Regulations Approval*
All dealings with Local Authority / Free Quotes & Advice

35 Spitfire Way,
Tunstall,
Stoke-on-Trent
ST6 5XQ

Rob Williams
Tel: 07947 211 467
Email: cds_@live.co.uk

FREE QUOTES & ADVICE

Construction Drafting Services
Cds

- **Client:** MR J HYDE
- **Project:** APPLICATION FOR ADVERTISEMENT CONSENT AT 5 - 6 MARKET PLACE, LEEK, ST13 5HH
- **Status:** FOR DISCUSSION ONLY
- **Title:** ELEVATIONS, SIGN DETAILS ETC
- **Drawing No:** SK 01
- **Scale:** VARIES @A2
- **Date:** SEPT 2017