ARBORICULTURAL METHOD STATEMENT

Client: Mr R Walker

Site: Woodview
Wood Street
Leek
Staffordshire

Date: 13 July 2016

Ref.: THL-R16/75

AMS

Site: Woodview, Wood Street, Leek

Contents

1.0 Introduction

2.0 Phasing and Monitoring

3.0 Root Protection Area (RPA)

4.0 Tree Surgery/Felling

5.0 Tree Protection Fencing

6.0 Restrictions within the Tree Protection Areas

7.0 Avoid Damage to Retained Trees

8.0 Installation of Underground Services

Appendices

Appendix A – Tree Works Schedule

Appendix B – Tree Protection Fencing

Appendix C – Tree Protection Plan

Appendix D – Scaffolding within the RPA

1.0 Introduction

1.1 The following method statement has been prepared by Tree Heritage Ltd for use in the proposed development at Woodview, Wood Street, Leek.

1.2 This Arboricultural Method Statement has been produced to aid the safe and healthy survival of all trees to be retained on the development site. Implementation of the protection methods and special construction details within this report are integral to achieving this goal.

1.3 For details of trees to be retained, location and types of protection measures reference should be made to drawing THL-0347-3 attached in appendix C of this report.

1.4 The information contained within this Arboricultural Method Statement is in line with BS 5837:2012 *Trees in relation to design, demolition and construction – Recommendations*.

2.0 Phasing and Monitoring

2.1 The following phasing and monitoring procedures are designed to protect the trees that are to be retained on site, from pre-development stage throughout construction to ensure their survival post development.

2.2 The order in which the works should commence is as follows;

1. **Pre- Commencement Site meeting –** This should include a detailed discussion of the exact position of the protective fences, the necessity to ensure adequate supervision at key stages and who is responsible on site for the welfare of the trees.

2. **Tree Surgery –** Including all felling and pruning works.

3. **Tree Protection Fencing –** Fencing should be erected prior to any development work commencing on site. No further work should be carried out until the tree officer has approved the deployment of the fencing. Plan THL-0347-3 shows all the fencing.

3.0 Root Protection Area

3.1 Based on the tree survey data, Root Protection Areas (RPA's) have been calculated for every retained tree. The RPA's are designed to protect at least a functional minimum of tree root mass in order to ensure the trees survive the development process.

3.2 It is the responsibility of everyone engaged in the development process to respect the tree protection measures and observe the necessary precautions within and adjacent to them.

4.0 Tree Surgery/Felling

4.1 It is recommended that all tree work including felling and pruning shall be carried out prior to the start of the construction process. Details of all tree works to be carried out are listed in the tree works schedule located in Appendix A. All tree works should be carried out in accordance with current industry best practice, BS3998:2010 Tree Work - Recommendations.

4.2 All tree work should be carried out by fully qualified and competent contractors such as Arboricultural Association Approved Contractors. The works should be discussed with the Arboricultural supervisor on site.

4.3 All operations should be carefully carried out to avoid damage to the trees being worked on and adjacent trees. No trees to be retained shall be used for anchorage or winching purposes.

5.0 Tree Protection Fencing

5.1 The tree protection fencing shall be erected prior to any of the following taking place; Plant and Material delivery, Soil stripping, Construction works, Utility installation, and Landscaping. When trees are near boundaries the RPA may extend into adjacent land, it is not necessary to erect barriers on adjacent land unless this is being used for access.

5.2 Once erected the fencing should be inspected by the supervising Arboriculturalist to ensure it is in the correct location and suitable for purpose. The fencing should also be inspected by the site supervisor on a regular basis and any concerns should be raised with the supervising Arboriculturalist.

5.3 The tree protection fencing should be suitable for purpose to protect the tree from vehicle and machinery damage throughout the entire construction process. An example of the type of tree protection fencing as recommended in BS5837:2012 is attached with this report as Appendix B.

5.4 The fencing should have signs attached warning that access into these areas is not permitted without written authority from the supervising Arboriculturalist.

6.0 Restrictions within the Tree Protection Areas

6.1 Inside the Tree Protection Areas the following shall apply;

- No mechanical excavation whatsoever.
- No excavation by other means without a detailed method statement being agreed by Supervising Arboriculturalist.
- No lowering of the levels for any purposes.
- No storage of plant or materials.
- No storage or handling of any chemicals
- No vehicle access.

7.0 Avoiding Damage to Retained Trees

7.1 Care should be taken to ensure no damage occurs to the retained trees throughout the development, either through the demolition and construction process or through vehicle access and material delivery.

7.2 Any pruning work required to allow access for high vehicle access should be carried out at the tree surgery stage in accordance with BS3998:2010 and done by suitably qualified specialist staff.

7.3 Special care will be required when using cranes to avoid contact with the canopies of the trees. Provision may be required for special measure if outriggers need to be used close to or within the RPA. Advice should be sought from the Supervising Arboriculturalist.

7.4 Plan THL-347-3 shows an area highlighted in yellow where special measures are require during the development. It is recommended that temporary ground protection is used during the development to reduce the impact on the trees. Figure 3 of BS5837 shows how scaffolding can be erected within the RPA. Figure 3 is attached in appendix D of this report.

8.0 Installation of Underground Services

8.1 All installation of underground services should be carried out outside the Root Protection Area where possible. Any installation within the RPA should be carried out by hand and in accordance with the National Joint Utilities Group Publication 10 (NJUG10).

8.2 A detailed method statement for any work within the RPA of any tree shall be produced by the contractor and agreed with the Supervising Arboriculturalist prior to the commencement of the work.

Tree Heritage Ltd

Ben Williams

Ben Williams
BSc (Hons) Arb. M.Arbor.A

13/07/16

Site: Wood Street, Leek
Surveyed by: Hugh Williams
Date: 22/10/15

Tree Heritage Ltd, 100 North St, Leek, Staffs, ST13 8DQ
T: 01538 384019 E: info@treeheritage.co.uk

APPENDIX A: TREE WORK SCHEDULE

KEY:

Measurements	Life Stage	Physiological Condition	Category Grading	Symbols
Height - *Metres* Stem Diameter - *Millimetres at 1.5m above ground level* Branch Spread - *Metres (North, South, East and West)* Crown Clearance - *Metres* RPA Radius - *Metres* Estimated Remaining Contribution - *Years* FSB - First Significant Branch - *Metres*	Y - *Young* SM - *Semi-Mature* EM - *Early Mature* M - *Mature* OM - *Over-Mature* V - *Veteran*	G - *Good* F - *Fair* P - *Poor* D - *Dead*	A - *High (green)* B - *Moderate (blue)* C - *Low (grey)* *U - Poor/Trees for removal (red)* **Sub-Categories:** 1 - *Mainly Arboricultural value* 2 - *Mainly Landscape value* 3 - *Mainly Cultural value*	< - *Less than* ~ - *Approximately* > - *Greater than*
RPA - *Root protection area (equivalent to a circle with a radius 12x the stem diameter measured at 1.5m above ground level)*				

Site: Wood Street, Leek
Surveyed by: Hugh Williams
Date: 22/10/15

Tree Heritage Ltd, 100 North St, Leek, Staffs, ST13 8DQ
T: 01538 384019 E: info@treeheritage.co.uk

Tree Ref.	Species	Height	Stem Diameter	Branch Spread				Crown Clearance	FSB Height + Direction	Life Stage	Phys. Condition	Structural Condition	Recommendations	Estimated Remaining Contribution	Category Grading	RPA Radius
				N	S	E	W									
T1	Varigated Sycamore(Acer pseudoplatanus Var. Variegatum)	18	630	7	7	2	7	4	3(N)	M	F	Ivy on stem. Major deadwood in crown. Tree has been topped in the past but has grown a new crown. There may be some decay in old pollard wounds.	Remove Ivy. Remove major deadwood. Prune clear of building. Crown extends towards building and will require reduction to allow both demolition and building work to place.	20+	B1	7.56
T2	Varigated Sycamore(Acer pseudoplatanus Var. Variegatum)	18	700	7	7	7	3	4	2(N)	M	F	Pollard. Ivy on stem. Major deadwood in crown. Crown distorted due to group pressure. Tree has been topped in the past but has grown a new crown.	Sever Ivy and remove when dead. Remove major deadwood.	20+	B1	8.4
T3	Common Pear(Pyrus communis)	15	740	5	5	5	0	2	3(S)	OM	P	Leaning East. Dieback in crown. Low bud/leaf density. Major deadwood in crown. Old grafted tree that appears to have partially fallen over.	Monitor.	<10	C1	8.88
T4	Hybrid Black Poplar(Populus serotina)	20	840	7	7	7	7	12	10(W)	OM	F	Ivy on stem. Major deadwood in crown.	Remove tree and retain root.	<10	C1	10.08

Site: Wood Street, Leek
Surveyed by: Hugh Williams
Date: 22/10/15

Tree Heritage Ltd, 100 North St, Leek, Staffs, ST13 8DQ
T: 01538 384019 E: info@treeheritage.co.uk

Tree Ref.	Species	Height	Stem Diameter	Branch Spread				Crown Clearance	FSB Height + Direction	Life Stage	Phys. Condition	Structural Condition	Recommendations	Estimated Remaining Contribution	Category Grading	RPA Radius
				N	S	E	W									
T5	Hybrid Black Poplar(Populus serotina)	20	920	7	7	7	7	12	10(W)	OM	F	Ivy on stem. Major deadwood in crown.	Remove tree and retain root.	<10	C1	11.04
T6	Wild Cherry(Prunus avium)	16	360	6	6	6	6	4	6(N)	M	F	Ivy on stem. Poor pruning cuts. Dieback in crown. Low bud/leaf density. Major deadwood in crown.	Remove tree.	10+	C1	4.32
T7	Ash(Fraxinus excelsior)	16	290	4	4	4	4	8	8(N)	EM	D		Fell tree on grounds of safety.	<10	U	4.92
T8	Ash(Fraxinus excelsior)	16	290	4	4	4	4	8	8(N)	EM	P	Low vitality. Declining. Dieback in crown. Major deadwood in crown.	Fell tree on grounds of safety.	<10	U	4.92
T9	Yew(Taxus baccata)	8	380	4	4	4	4	2	1(N)	EM	G		No work required.	40+	A1	4.56
T10	Small-leaved Lime(Tilia cordata)	16	500	5	5	5	5	6	3(NE)	M	F	Poor shape & form. Poor pruning cuts. Major deadwood in crown. Tree has been topped.	No work required.	20+	B1	6

Site: Wood Street, Leek
Surveyed by: Hugh Williams
Date: 22/10/15

Tree Heritage Ltd, 100 North St, Leek, Staffs, ST13 8DQ
T: 01538 384019 E: info@treeheritage.co.uk

Tree Ref.	Species	Height	Stem Diameter	Branch Spread				Crown Clearance	FSB Height + Direction	Life Stage	Phys. Condition	Structural Condition	Recommendations	Estimated Remaining Contribution	Category Grading	RPA Radius
				N	S	E	W									
T11	Silver Birch(Betula pendula)	16	320	4	6	6	1	4	4(N)	M	F	Poor shape & form. Decay present on stem. Cavity on stem. Major deadwood in crown. Unbalanced crown shape. Crown distorted due to group pressure. Tree has been topped.	Remove tree.	10+	C1	3.84

Figure 2 **Default specification for protective barrier**

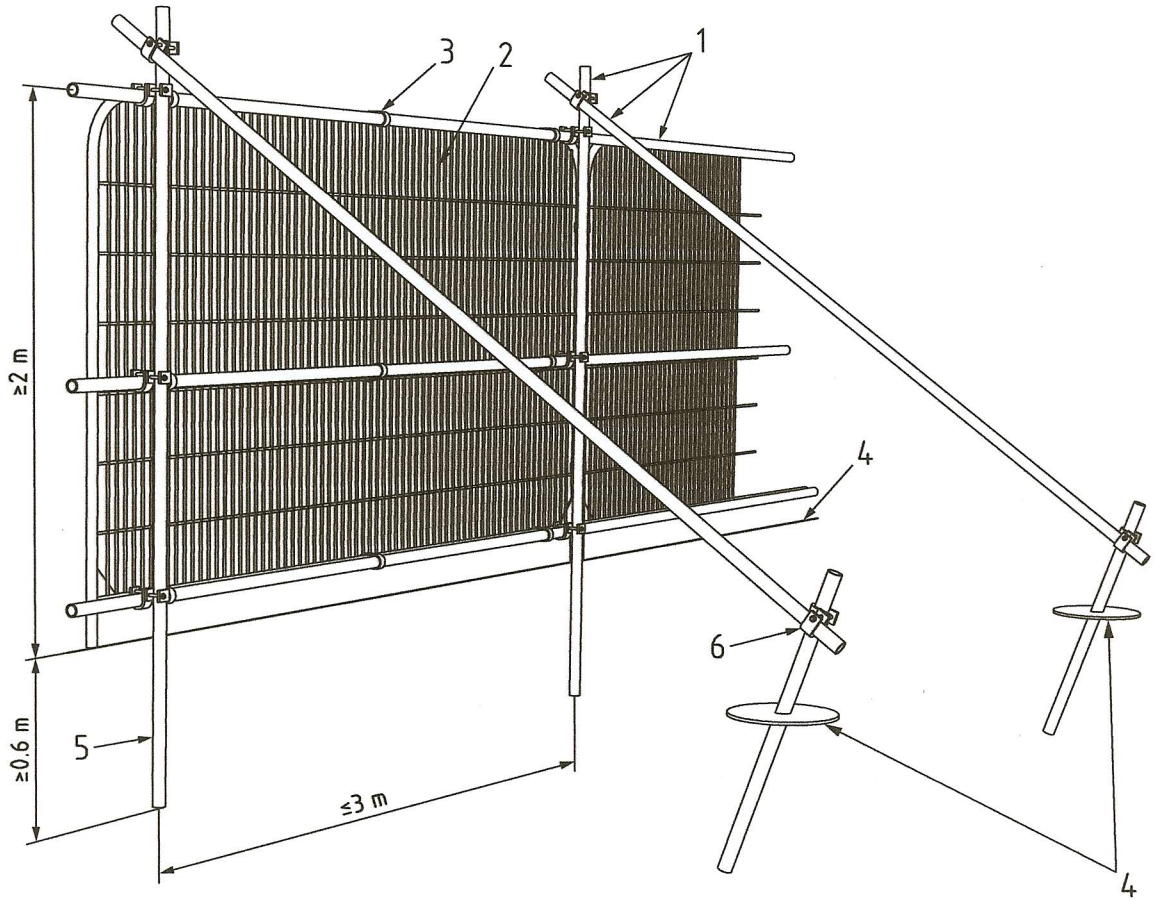

Key

1 Standard scaffold poles
2 Heavy gauge 2 m tall galvanized tube and welded mesh infill panels
3 Panels secured to uprights and cross-members with wire ties
4 Ground level
5 Uprights driven into the ground until secure (minimum depth 0.6 m)
6 Standard scaffold clamps

Figure 3 **Examples of above-ground stabilizing systems**

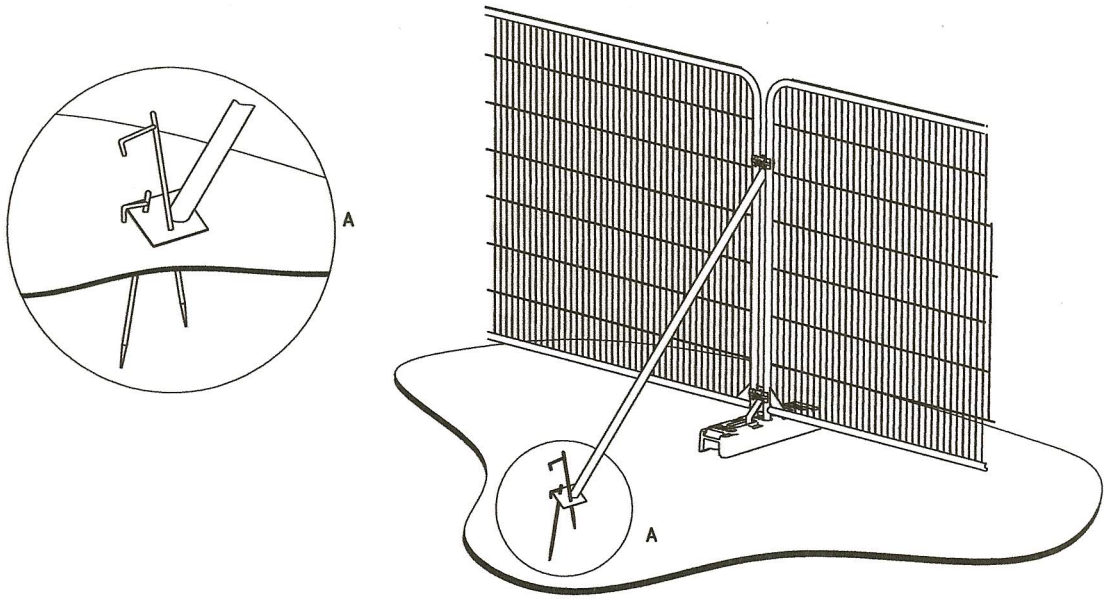

a) Stabilizer strut with base plate secured with ground pins

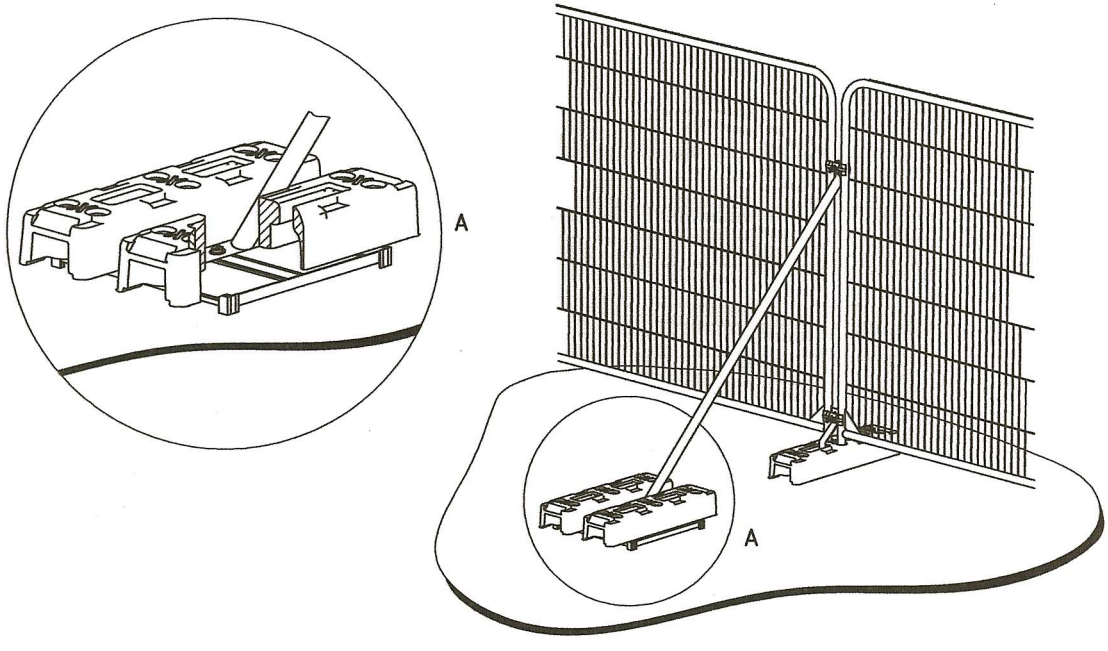

b) Stabilizer strut mounted on block tray

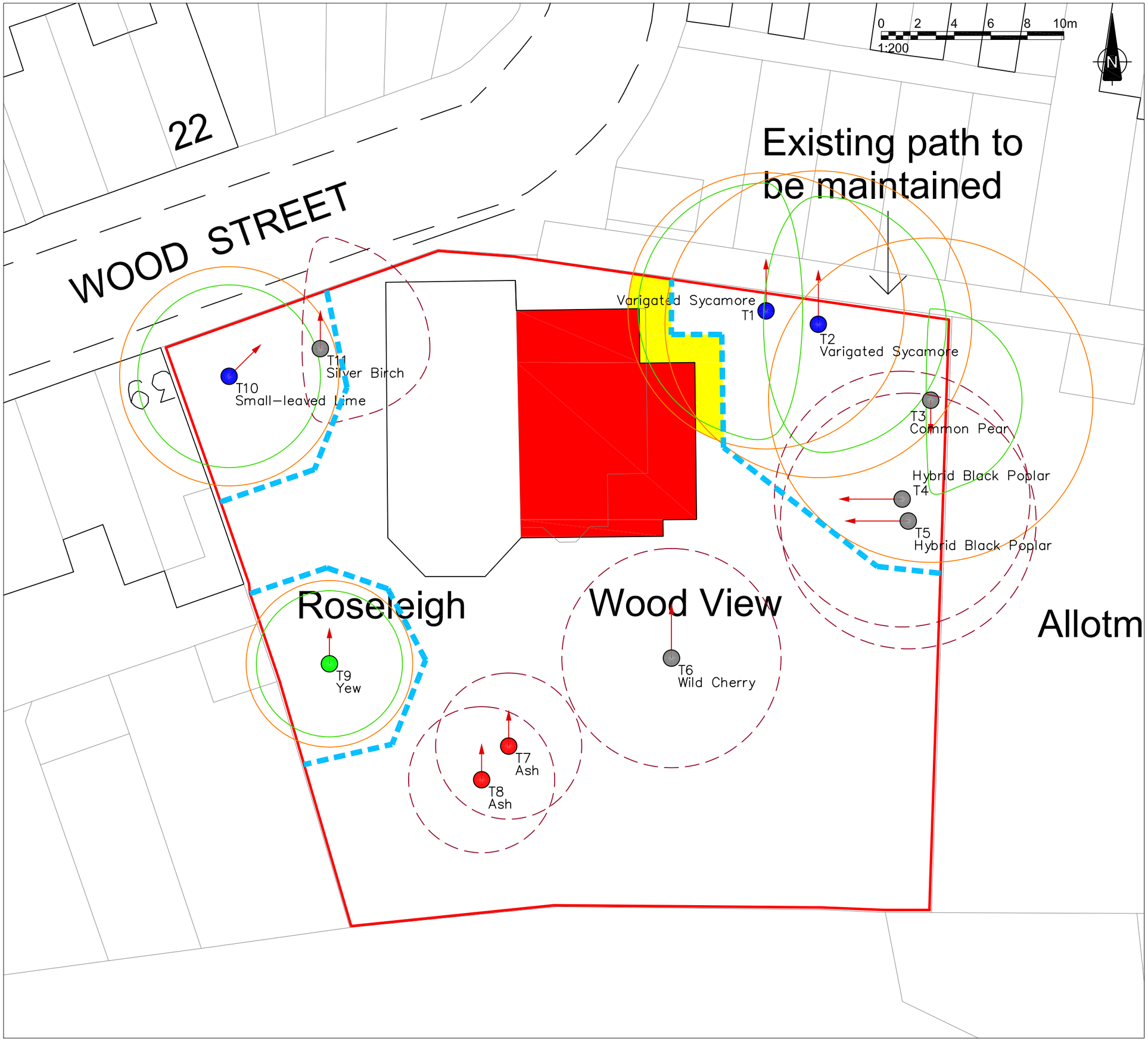

Notes:

1. Do not scale off this drawing. Tree canopies are symbolic only and are representative of the average spread; this may not represent the true outline. Note that the tree stem may not sit centrally to canopy. The stem is not shown to scale - see schedule.
2. The original of this drawing was produced in colour – a monochrome copy should not be relied upon.

Rev:	Date:	Status/Amendments:	By:

Key:

- Category A Tree
- Category B Tree
- Category C Tree
- Category U Tree
- Branch Spread
- Tree to be Removed
- Root Protection Area (RPA)
- First Significant Branch Direction
- Root Protective Barrier
- Special Measures
- Tree Shadow

GROWING SINCE 1982
TREE HERITAGE

Tree Heritage Ltd, 100 North Street,
Leek, Staffordshire, ST13 8DQ

Telephone: 01538 384019

treeheritage.co.uk info@treeheritage.co.uk

Client:
Mr R Walker

Project:
Woodview, Wood Street, Leek

Drawing Title:
Tree Protection Plan

Scale:	Paper Size:	Date Created:
1:200	A3	13/07/16
Drawing Number: THL-0347		Drawing Revision: 3

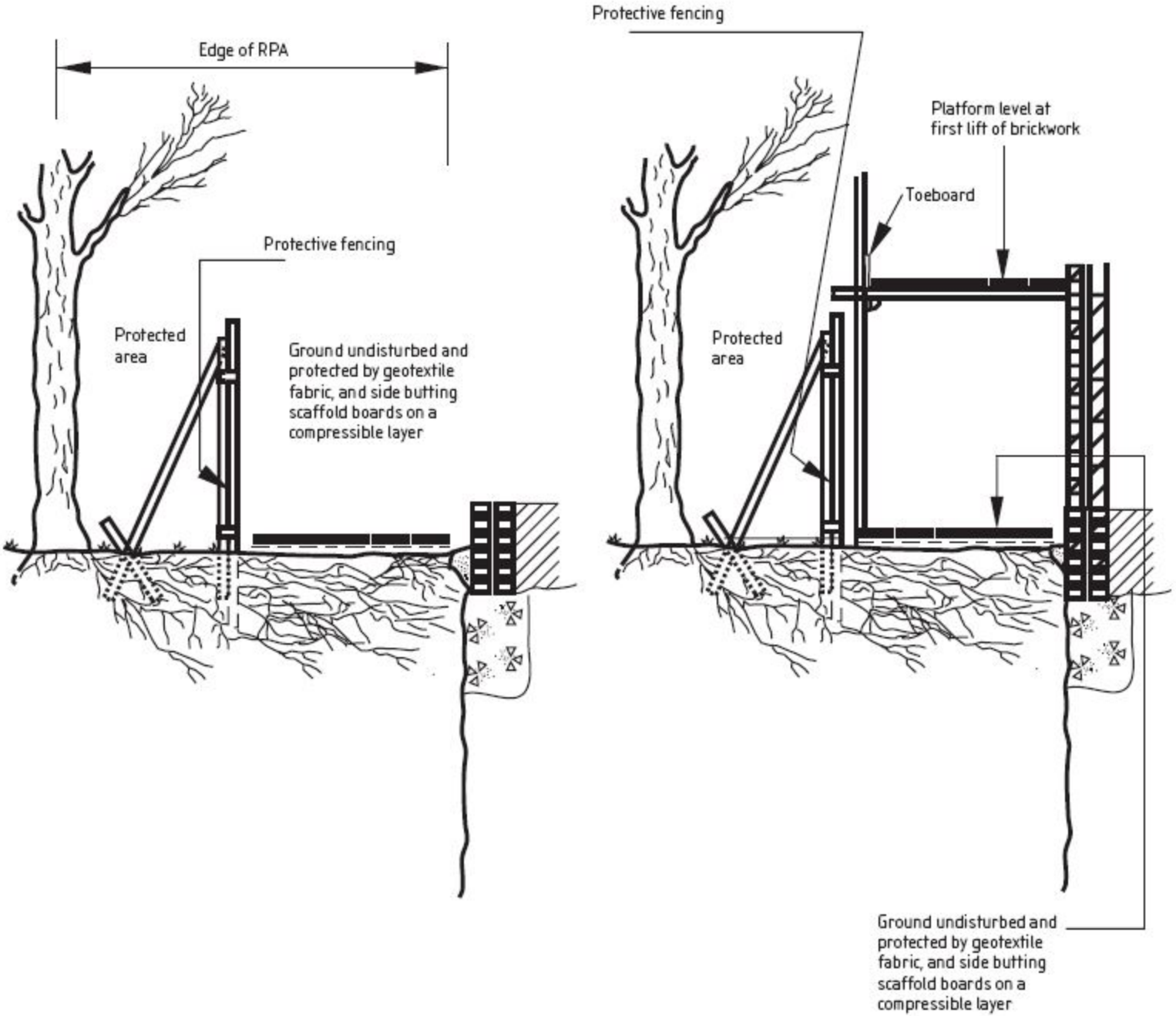

Figure 3 — Scaffolding within the RPA