Reference:	09/01159/FUL
	Waterhouses 09/01159/FUL 2 DEC 2009 - SM

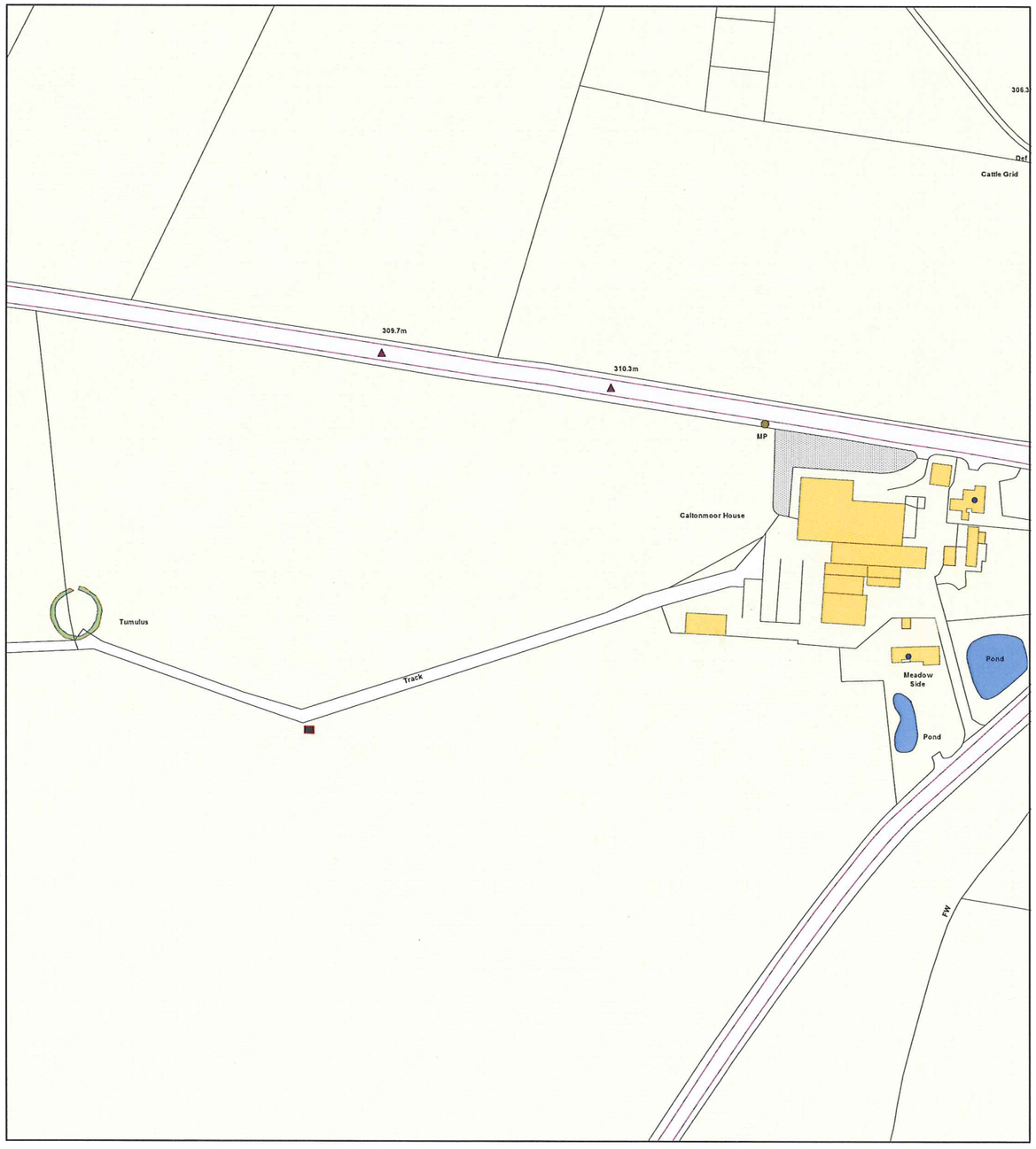

Date	03 December 2009
Organisation	SMDC
Department	Planning
Comments	

Scale : 1:2500

© Crown copyright. All rights reserved.
Staffordshire Moorlands District Council.
Licence no. 100018384. 2009.

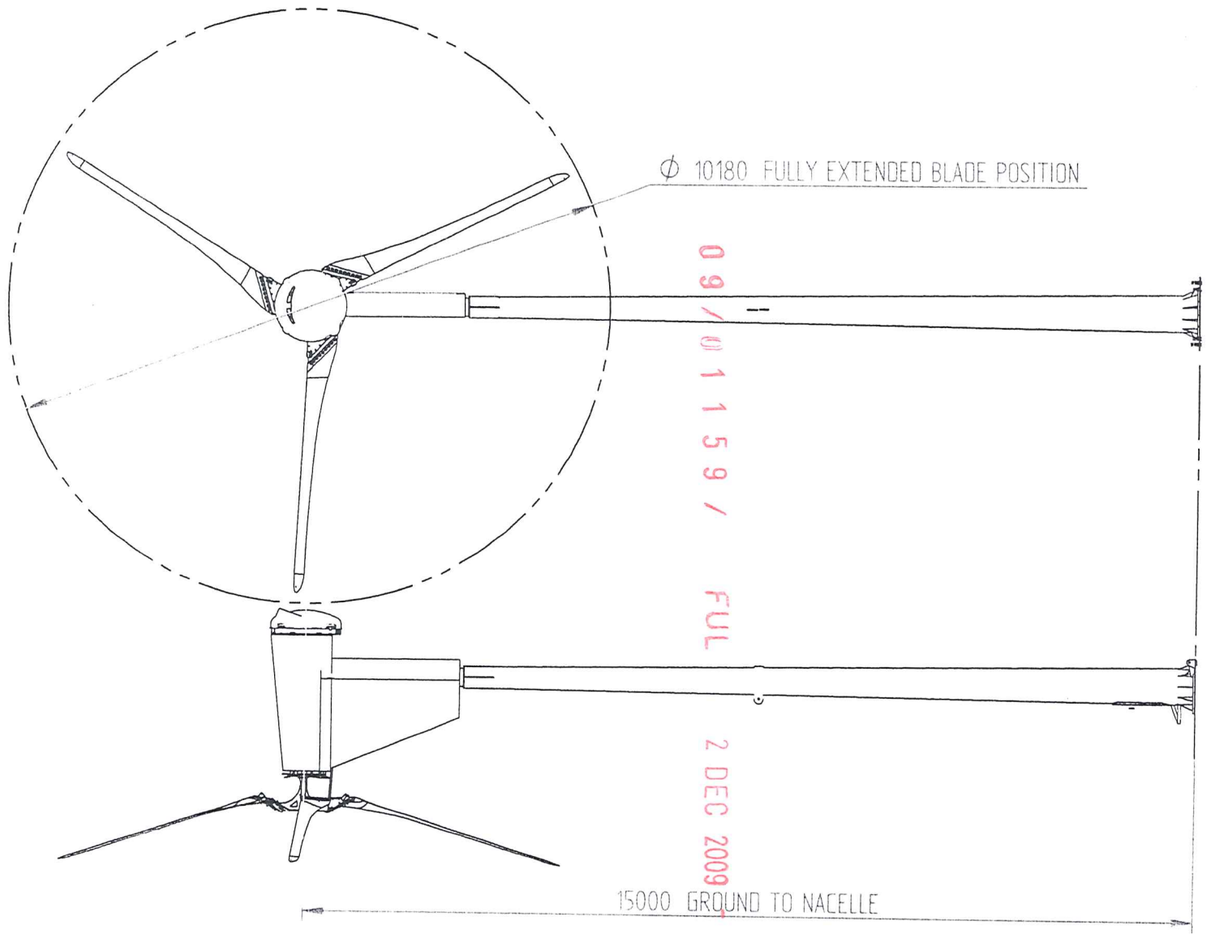

09/01159/FUL 2 DEC 2009 SM

REV	DESCRIPTION	DATE	ECR	GRID REF.	ENG	SNR. ENG

REVISION HISTORY

GENERAL NOTES
DEBURR ALL HARP EDGES
WELD SYMBOLS TO BS 499 PART 2C
WELDING TO BS EN 1011 2
GALVANISING TO EN 1461 1
CONFORM TO EN 1090 1

PROVEN
PROVEN ENERGY

UNLESS OTHERWISE SPECIFIED
DIMENSIONS ARE IN MILLIMETERS
ANGLES ±0.1°
1 PL ±0.1 2 PL ±0.01

Projec. Ang.

Proven Energy Ltd. Wardhead Park Stewarton KA3 5LH
Scotland Tel +44 (0)1560 485570 info@provenenergy.com
All Rights Reserved

	NAME	DATE
DRAWN	EC	23/09/09
CHECKED	A McN	23/09/09
DWG NO		SIZE A4 REV 0
SCALE: 1:100	WEIGHT:	SHEET 3 OF 3

TITLE: 15kW 15m For Planning

Material: Finish:

Customer No.

Released for

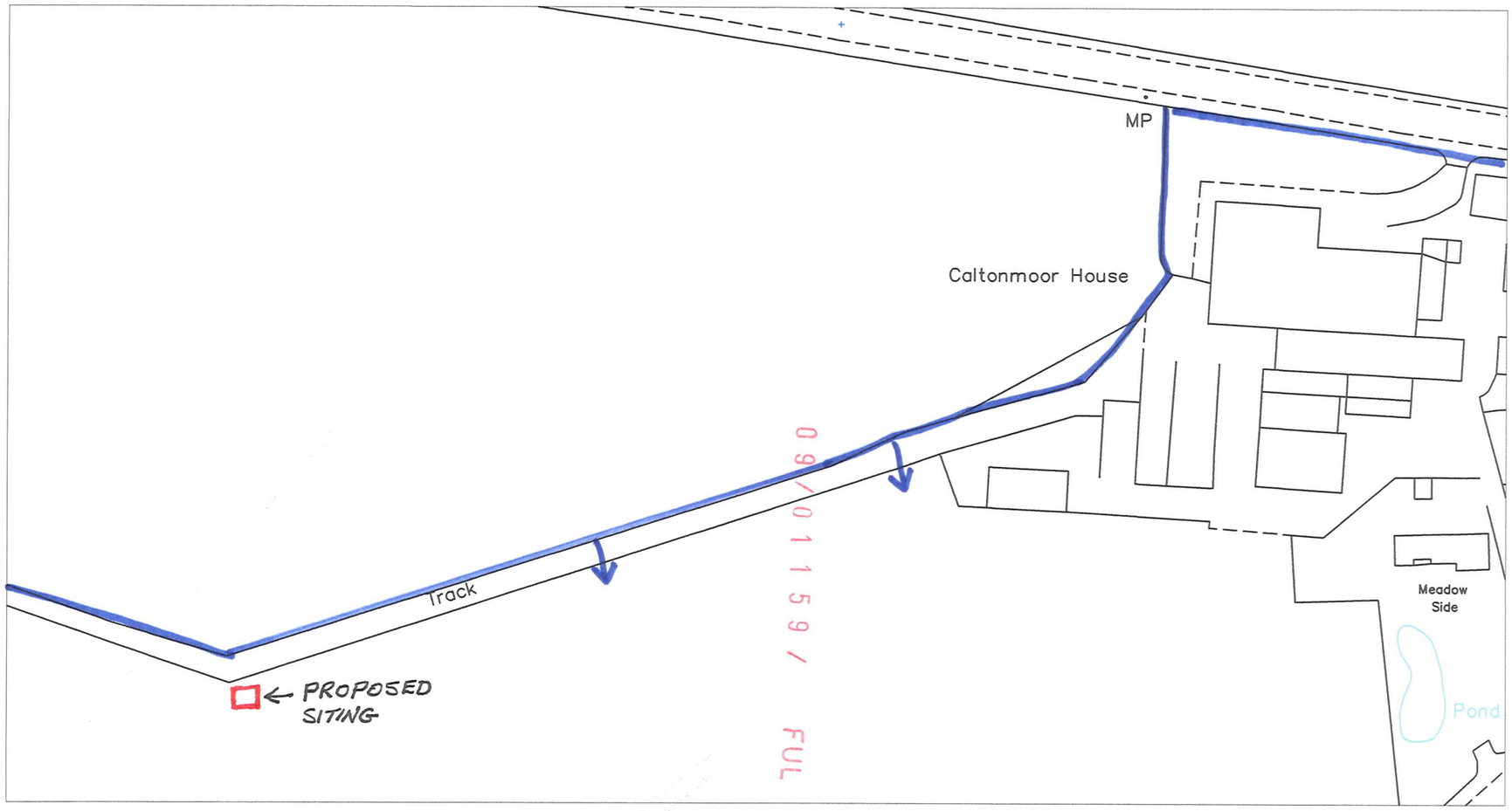

09/01159/FUL
2 DEC 2009 - S M

STEPHEN GOWER ASSOCIATES.
29A ST. EDWARD STREET,
LEEK,
STAFFORDSHIRE,
ST13 5DN.

Tel: 01538 386808
Fax: 01538 384401

N

SITE LOCATION PLAN.
ERECTION OF 15KW FREESTANDING WIND TURBINE, LAND ADJACENT TO CALTON MOOR HOUSE FARM.

Scale - 1:1250
Paper size: A4

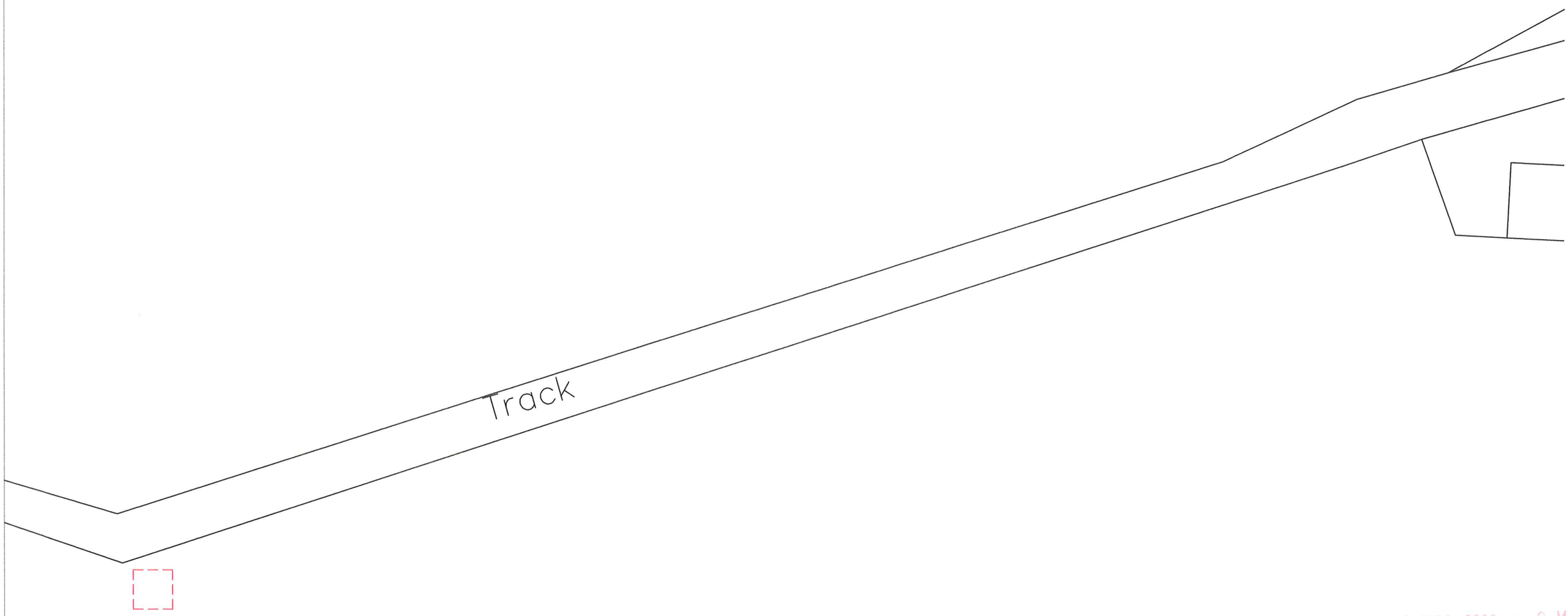

09/01159/FUL 2 DEC 2009 - SM

STEPHEN GOWER ASSOCIATES,
29A ST. EDWARD STREET,
LEEK,
STAFFORDSHIRE,
ST13 5DN.

Tel: 01538 386808
Fax: 01538 384401

N

SITE PLAN.

PROPOSED SITING OF 15KW WIND TURBINE CALTON HOUSE FARM

Date: 1st December 2009.

Scale 1:500

.