0 1 2 3 4 5 metres

Scale Bar @1:50 on A2 Sheet

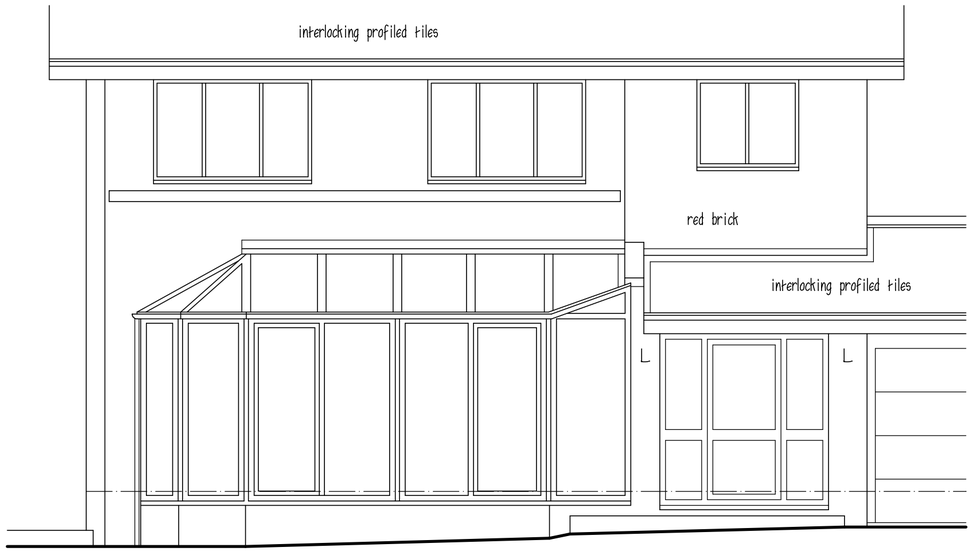

PART FRONT ELEVATION

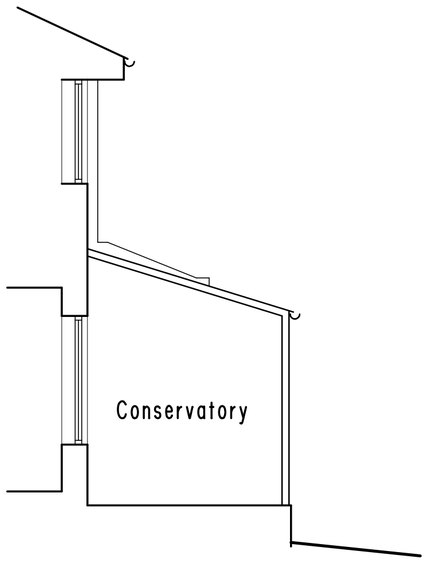

PART SECTION

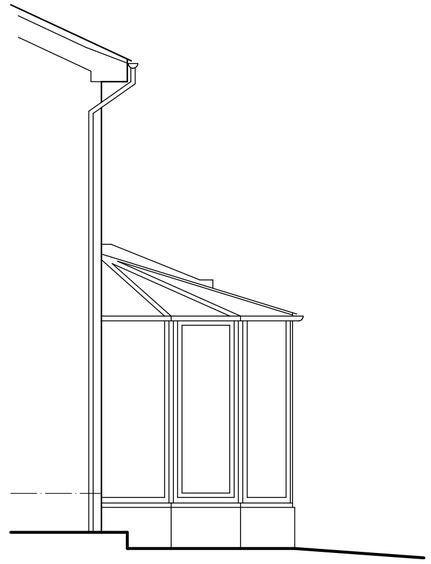

PART SIDE ELEV.

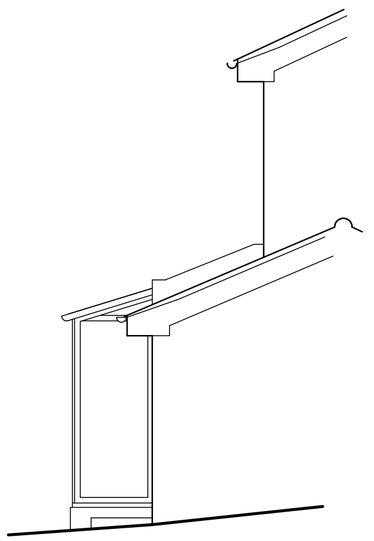

PART SIDE ELEV.

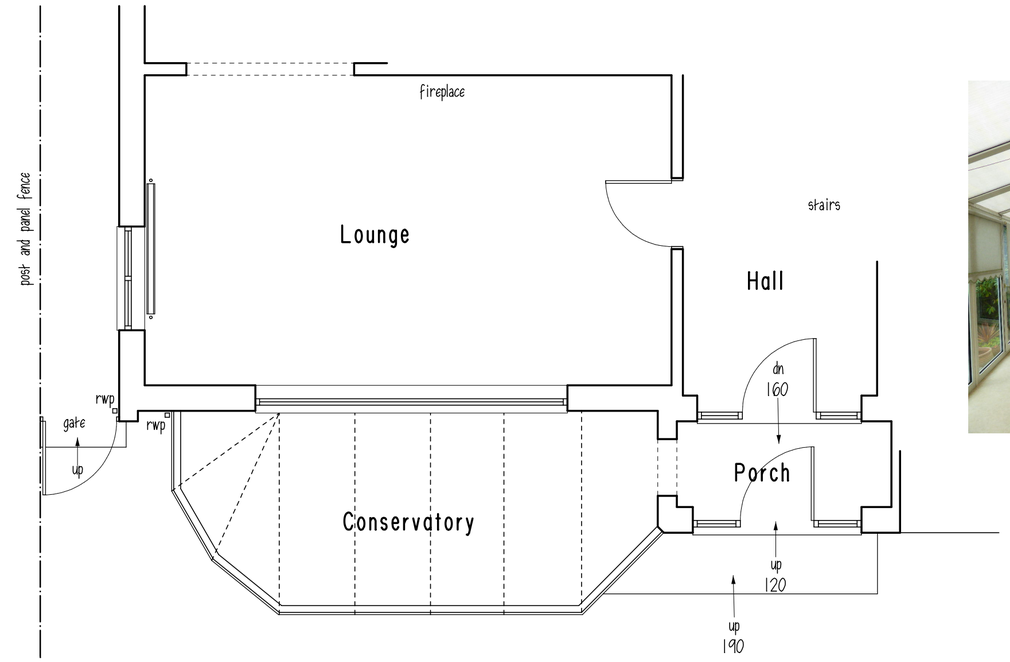

PART FLOOR PLAN











RICS
The mark of
property professionalism worldwide

RLM ASSOCIATES

JOB	WEST WINDS, BIRCHALL.
CLIENT	Mr. & Mrs. BEARDMORE.
DRAWING	PART SURVEY DETAILS.
DATE	August 2017.
SCALE	1:50.
DRWG No.	RLM865/1.
REVISION	