Existing Structures To Be Demolished and Removed

Paper Size A4
Scale 1cm=1m (1:100)

Plan View

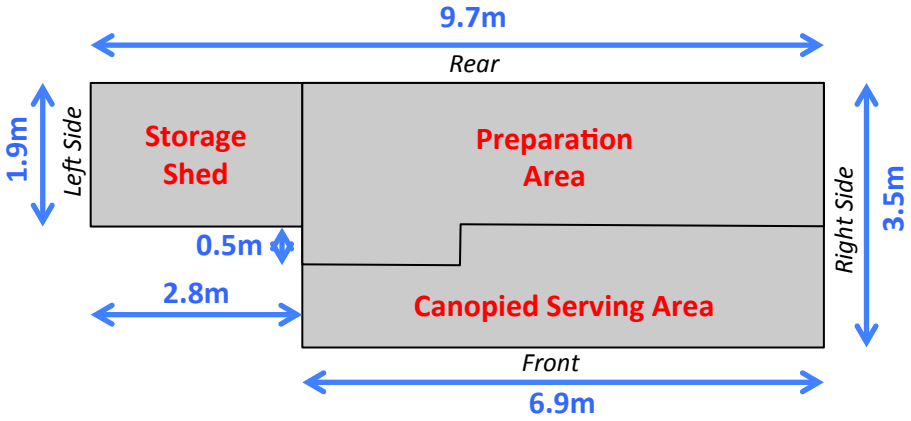

Front Elevation

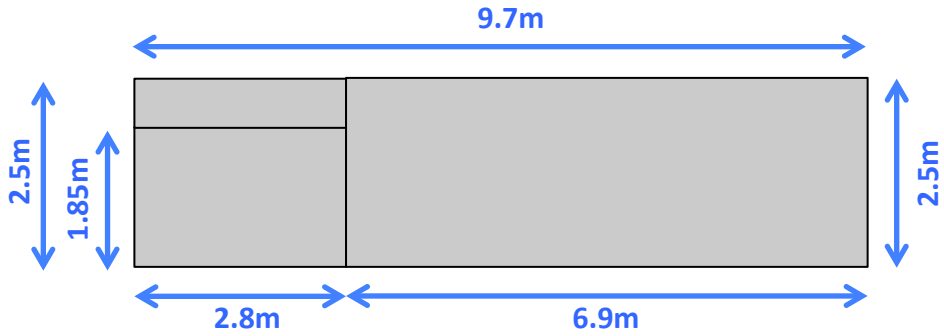

Right Side Elevation

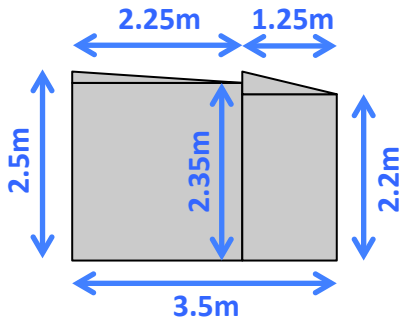

Rear Elevation

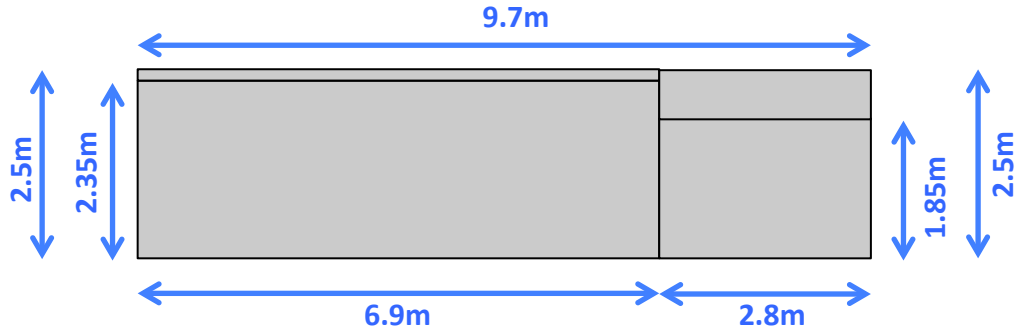

Left Side Elevation

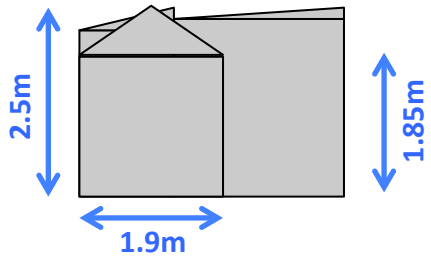

Total Footprint Area: 29.47m^2