*Note This drawing has been prepared for submission to the local authority for necessary statutory approvals. Nominated contractor to verify all dimensions either written or scaled together with drainage lines and inverts etc. prior to commencement of formal construction work on this site.

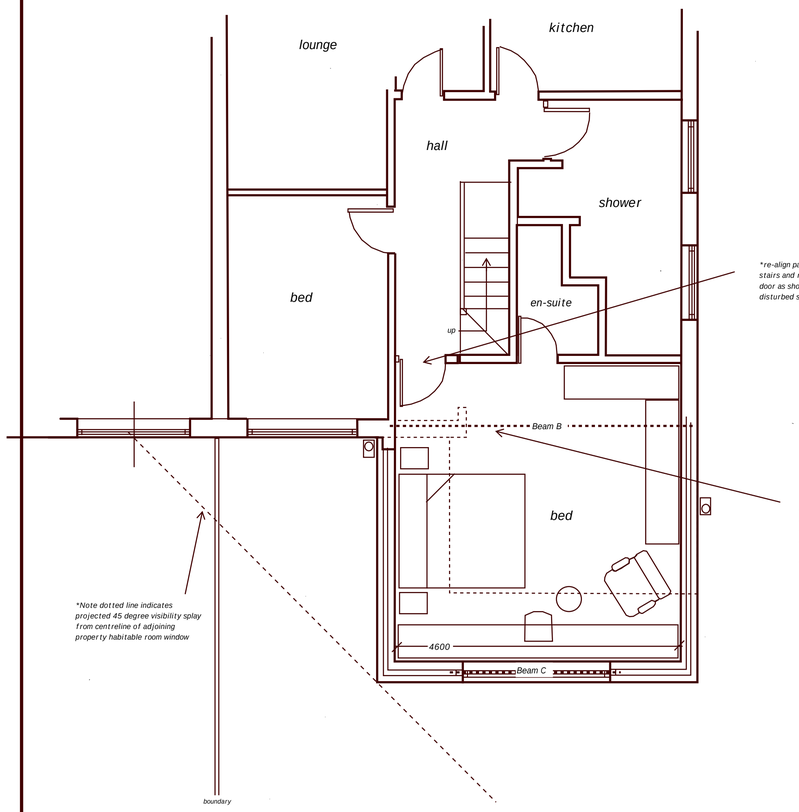

*re-align partion adjacent to hall and stairs and reposition bedroom access door as shown - make good to all disturbed surfaces.

*Note remove existing front door and frame and prop existing roof structure to allow demolition of external brickwork and insertion of new support beam B over as indicated - all to accord with engineer design sheets

*Note dotted line indicates projected 45 degree visibility splay from centreline of adjoining property habitable room window

layout plan to front

*Note screw fix 1000x2.5mm galvanised ms straps extended equally to each side of ridge on to 175x47mm sw C16 rafters at 400mm max centres notched and screwed to 100x75mm sw wall plate bolted to top flange of steel UB ridge beam (Beam A).
100x47mm sw C16 ceiling ties bolted to rafters with M16 bolts and dog tooth connector washers.
* see general spec for roof insulation detail

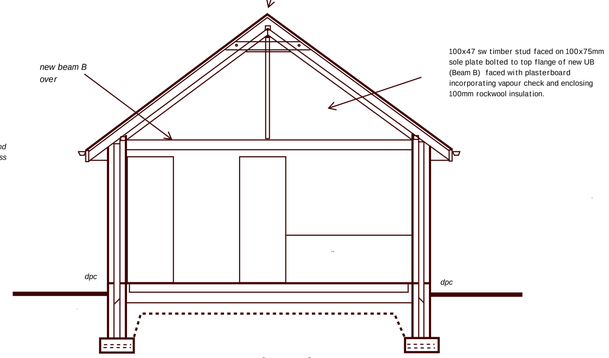

section view

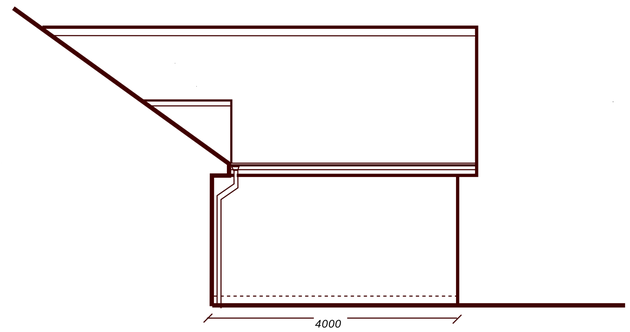

proposed side elevation

*Strip back existing tiles and for new small projecting gable feature over existing bedroom window. See general roof spec and use 100x47mm sw C16 rafters supported off 170x38mm sw lay boards securely fixed to existing rafters. 18mm external ply cladding to sw stud framework with pvc clad panel finish on treated battens and breathable membrane



proposed front elevation

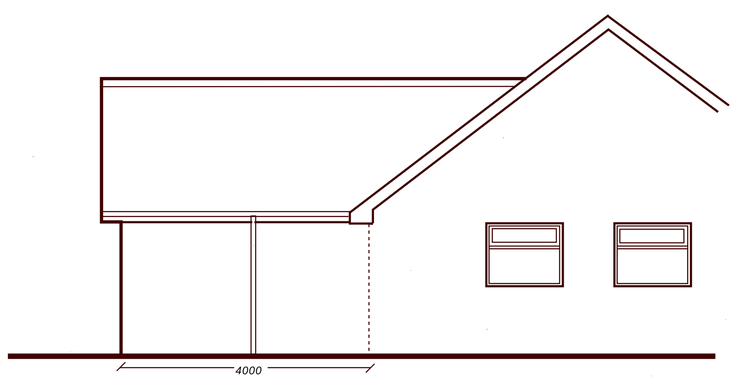

proposed side elevation

*General Specification
*Preliminary Works
Expose existing drain lines as necessary to assess if affected by proposal.
Examine existing walls and load bearing capacity to assess fit for purpose to support new roof frame and support beam etc. to satisfaction of inspecting authority.

*Tiled Roof
Concrete single lap lap tiles to match existing individually fixed in place in accord with manufacturer specification and BS5534 on treated battens on approved breathable membrane over 170x47mm sw C16 rafters at 400mm centres
birds-mouthed and screwed through truss type steel clips to continuous 100x75mm sw wallplate anchored to supporting wall by galvanised ms straps at max.1000mm centres.
head of rafters screwed to ridge beam (see engineer notes) and members tied with continuous galvanised metal strap fixings to restrict spread - see notes.
Install 100x47mm sw C16 high level ties bolted through to rafters with m16 steel bolts using steel timber connector washers.

*Roof Insulation:
Pitched ceilings to have Celotex FR5000 (120mm) insulation board between rafters ensuring min 25mm air gap behind roof membrane and under-draw with Celotex PL 4000 insulation backed plasterboard incorporating vapour check membrane all to manufacturer specification.
Note: This or similar construction to achieve max 0.16 w/m2k U-Value.

*Walls (External):
Selected facing brick to match existing, min 100mm cavity enclosing Dritherm 32 insulation fill to manufacturer specification and internal leaf of 100mm load bearing thermal blockwork (eg: Celcon Solar) faced internally with plasterboard on treated battens or cement dabs. This or similar construction to achieve max 0.28 w/m2 k U-Value
*Note: new walling to be effectively bonded to existing structure to satisfaction of local authority surveyor and wall ties to be stainless steel suitable for 100mm cavity width and compliant with DD140

*Internal Walls (non load bearing)
100x47 sw timber stud faced on 100x75mm sole plate and dpc faced with plasterboard incorporating vapour check and enclosing 100mm rockwool insulation.

*Foundation Detail:
lay new 600mm x 225mm concrete strip to abut adjacent foundations reinforced with 2 no layers B503 steel fabric at depth to suitable bearing strata as indicated on section view.
All foundation works to satisfy inspection authority surveyor and depth to have due regard to proximity of existing drain lines ensuring no surcharge to pipes.

*Floor ;
Floor finish to client requirement on min 60mm screed or power float finish to 100mm concrete slab on 1200g dpm over Celotex GA 4000 (75mm) insulation board turned up in 25mm thickness at floor perimeter to dpc to avoid cold bridge. Lay further dpm linked to dpc over well blinded natural stone, sulphate free hardcore compacted in maximum 150mm layers.
U-Value max 0.22 w/m2k - P/A ratio 0.70

*Drainage - External:
Rainwater to discharge to repositioned gullies and existing system to satisfaction of inspecting authority. Ensure adequate protection and support to any drainage found passing beneath new extension footprint.

*Fenestration:
Install high performance double glazing using Pilkington Low E 'k' glass and min 25mm cavity or similar to achieve maximum 1.40 w/m2 k U-Value
Openings to represent minimum 5% of adjacent floor as natural vent plus min 10000mm2 trickle ventilators to head of frame.
*Escape Window: Provide opening casement capable of safe egress in emergency i.e. min 0.33m2 clear opening (say 800x450mm) set within 1100mm of internal floor level.
Ensure that all doors and critical glazing areas are fitted with laminated or toughened safety glazing compliant with current BS:EN:12150.

* New Gable Window
Frame to gable to comprise glazing as per general spec with units built around minimum size steel frame section indicated in engineer specification (see separate design sheets).

*Electrical Work:
All notifiable electrical work to be carried out by a suitably qualified contractor registered with an approved national body.
A formal completion certificate to be issued in compliance with current Part P Building Regulations and to satisfaction of inspecting authority surveyor.
*Install sockets to extension area to requirements of client and provide co-axial and satellite ports if needed.
Note: all lighting to be low energy type.
*Install a mains operated inter-linked smoke alarm system with battery back up to circulation areas and critical locations in compliance with BS5839 and to satisfaction of local authority surveyor.

*Heating
All extended space heating to be to the full requirements of a suitably qualified heating engineer and assessment of existing heating system. Install thermostatic control valves as necessary

Proposed Front Bedroom Extension at 24, Johnstone Avenue, Werrington, Staffs ST9 0DY

Scale 1-50 dwg ref JA1c -
June 2017 - proposed layout

Geoff Rouane C.BuildE, MCABE, MRICS.
Chartered Building Surveyor
Tel 07946517767
Email: geoffrouane@btinternet.com