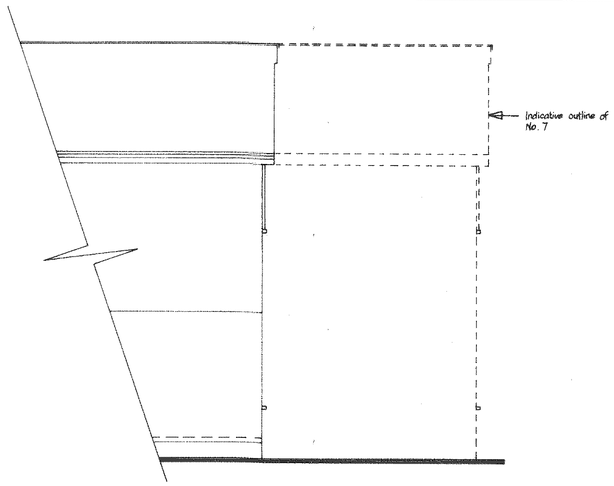

Existing
side elevation



Existing
front elevation

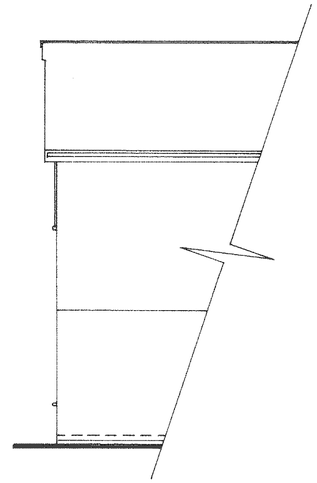

Existing
side elevation

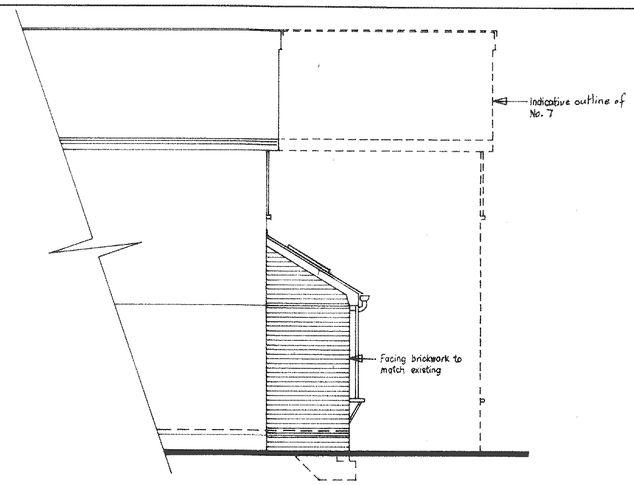

Proposed
side elevation



Proposed
front elevation

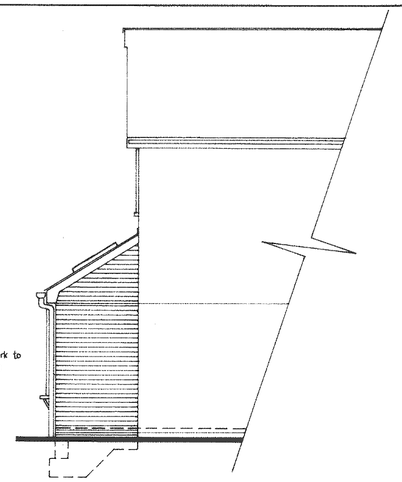

Proposed
side elevation

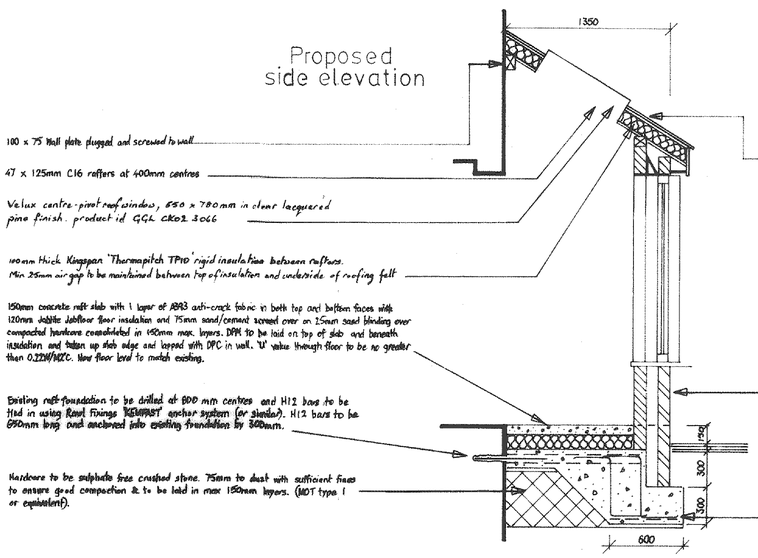

Typical cross-section

THIS DRAWING HAS BEEN PREPARED FOR THE PURPOSE OF OBTAINING PLANNING APPROVAL AND BUILDING REGULATION APPROVAL.

NO SITE WORKS SHOULD COMMENCE UNTIL ALL APPROVALS HAVE BEEN RECEIVED IN WRITING.

Client	Mrs G Ryles	Scale	1:50, 1:25
Project	Proposed Front Extension to 5 Crofter Close – ST8 8SR	Size	A1
Drawing	Proposed Front Extension Elevations and Section	Date	April 2017
		Drwg. No.	Ryles/17/02