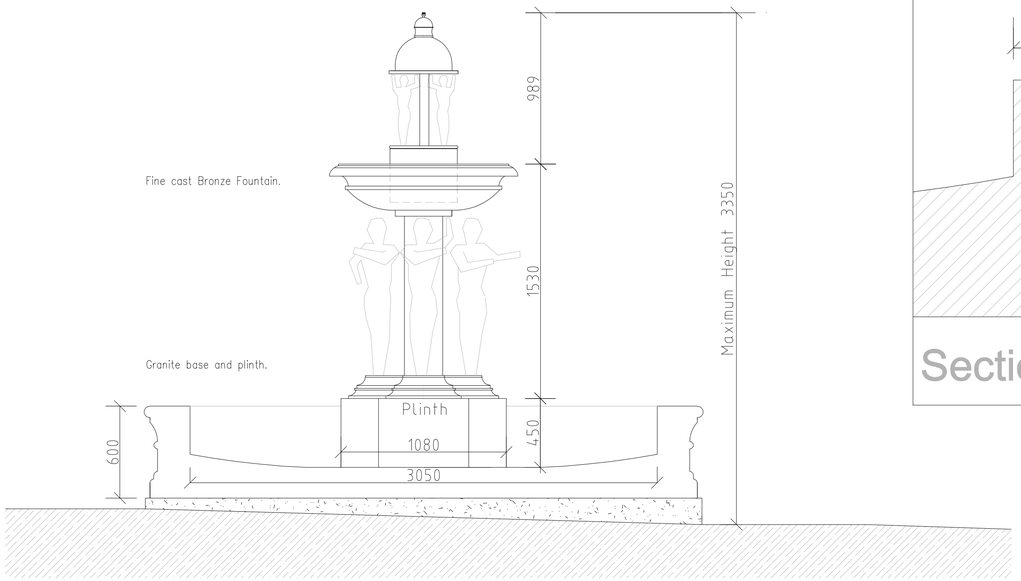

Elevation Scale 1:20

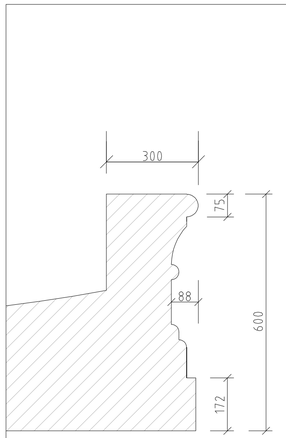

Section X Scale 1:10

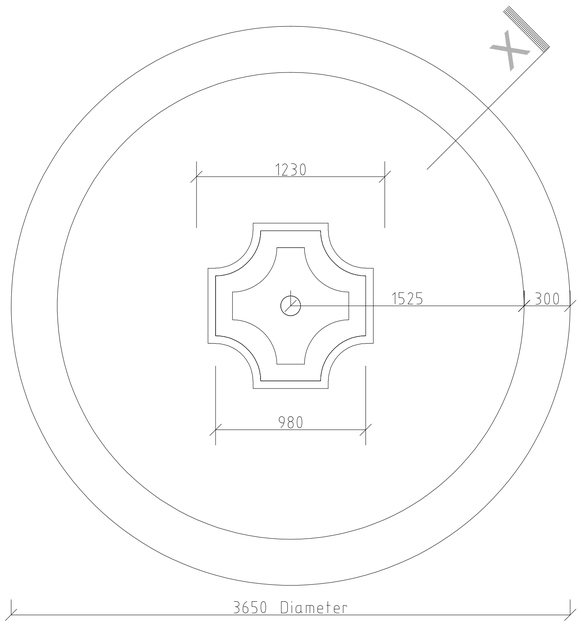

Plan Scale 1:20

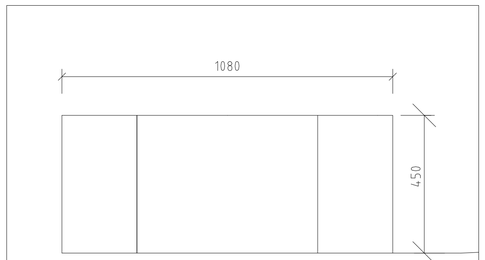

Plinth Elevation Scale 1:10

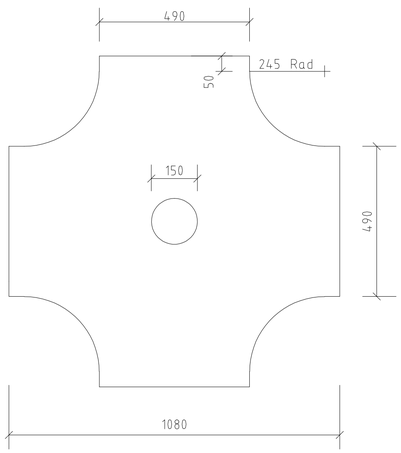

Plinth Plan Scale 1:10



Location Plan Scale 1:1250



Site Plan Scale 1:500

Rev.	Drawn	Comments.	Date

Developer:
Mr G Harrison.

Project:
Proposed Fountain at Upper Fernyhill Farm, Basford, Leek.
Staffordshire ST13 7ET.

Title:
Plans & Elevation.

Status:
Planning

Scale at Size A1:	Date:	Drg.
1:20 1:500 1:1250	20-03-17	1475-01

A.C.BAILEY
Plot 1 Stanley ST9 9LT
T:01782 503302 - 07711 870008 E:office@planstobuild.co.uk