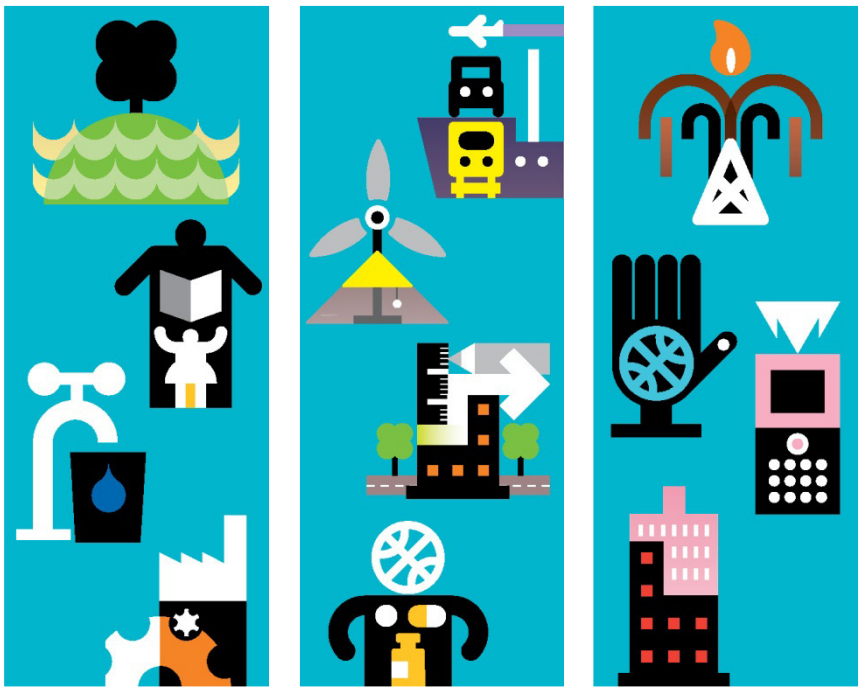

Poolend

Arboricultural Survey Report

July 2016

Mott MacDonald

Poolend

Arboricultural Survey Report

July 2016

Mott MacDonald, 2nd Floor, 2 Brewery Wharf, Kendell Street, Leeds LS10 1JR, United Kingdom
T +44 (0)113 394 6700 **F** +44 (0)113 394 6701 **W** www.mottmac.com

Issue and revision record

Revision	Date	Originator	Checker	Approver	Description
E	15/07/2016	Rhys Lennon	James Sothcott	Charles Peeler	Amendments to layout

Information class: Standard

This document is issued for the party which commissioned it and for specific purposes connected with the above-captioned project only. It should not be relied upon by any other party or used for any other purpose.

We accept no responsibility for the consequences of this document being relied upon by any other party, or being used for any other purpose, or containing any error or omission which is due to an error or omission in data supplied to us by other parties.

This document contains confidential information and proprietary intellectual property. It should not be shown to other parties without consent from us and from the party which commissioned it.

Contents

Chapter	Title	Page
Executive Summary		i
1	Introduction	1
1.1	Terms of Reference	1
1.2	Scope of Works	1
1.3	Tree Assessment Methodology	1
1.4	Limitation of the Survey	3
2	Tree Summary	4
2.1	Overview	4
2.2	Summary of Retention Categories	4
3	Implications for Proposal	5
3.1	Tree Preservation Orders (TPO) and Conservation Areas (CA)	5
3.2	Protection of Root Protection Areas (RPA)	5
3.3	Risk to Trees from General Works Activities	5
3.4	Protective Barriers General	6
3.5	Precautions in Respect of Temporary Works	7
3.6	Sequence of Activities	7
3.7	Arboricultural Inspection	7
3.8	Environmental Law	7
3.9	Services	8
4	Recommendations	9
4.1	Tree Removal	9
4.2	Barrier Protection	9
4.3	Tree Pruning	9
4.4	Construction Within the RPA	9
5	Conclusions	11
Appendices		12
Appendix A.	Drawings	13
A.1	Tree Constraints Plan	13
A.2	Tree Protection Plan	14
Appendix B.	Key to Tree Survey Schedule	15
Appendix C.	Tree Survey Schedule	16
Appendix D.	Root Protection Area Calculations	20
Appendix E.	Temporary Protective Fencing	22
E.1	Extract from BS5837:2012 Default Specification for Protective Barrier	22

E.2 Extract from BS5837:2012: Examples of Above Ground Stabilising System 23
E.3 Extract from BS5837:2012 Ground Protection during Demolition and Construction 24
Appendix F. Glossary 25
Appendix G. References 26

Executive Summary

Mott MacDonald has been commissioned by Severn Trent Water to carry out an arboricultural survey in support of a planning application for the proposed installation of a new steel framed building at the existing Severn Trent Water site, Poolend BPS, Macclesfield Road, Poolend, Leek, ST138SG.

The survey and associated report has been undertaken in accordance with *BS 5837:2012 Trees in relation to design, demolition and construction - Recommendations*, which is intended to assist decision making with regard to the existing and proposed trees in the context of design, demolition and construction. This report will also assess the potential impact that the Scheme may have on the surveyed trees and includes a method statement for working close to trees to be retained.

This survey is not, nor should be taken to be, a full or thorough assessment of the health and safety of trees on or adjacent to the site, and therefore it is recommended that detailed tree inspections are undertaken on a regular basis with the express purpose of complying with the land owner's duty of care and satisfying health and safety requirements.

There are 52 individual trees within the area for the proposed works. The following categories were assigned:

- Category A i.e. trees of high quality; 1 individual tree
- Category B i.e. trees of moderate quality; 36 individual trees
- Category C i.e. trees of low quality; 13 individual trees
- Category U i.e. trees for removal; 2 individual trees

The current footprint of the works will require a total of 21 individual trees to be removed as they are in direct conflict with the Scheme. Of the trees identified for removal, 15 have been assessed as Category B (trees of moderate quality), 5 have been assessed as Category C (trees of low arboricultural quality) and 1 tree has been assessed as Category U (tree to be removed on grounds of health/condition). Their removal will not significantly impact the landscape or arboricultural value of the area provided that replacement mitigation planting after

the Scheme is carried out and the correct barrier protection is installed to protect the remaining trees.

11 individual trees (19, 20, 21, 22, 23, 24, 25, 35, 45, 46 and 47) should be protected with temporary protective barrier in accordance with BS5837:2012 to stop any encroachment into the RPA or crown area of the trees. All of the remaining trees along the southern boundary are adequately protected by the presence of the new inner fencline around the main infrastructure of the site and adjacent to the access road.

Individual protection for the above ground structure of 6 individual trees (1, 10, 11, 12, 13 and 15) has also been specified to enable construction of the south central area of the site. This protection is to take the form of a robust plywood box built around each trunk (360 degrees) to prevent mechanical/physical damage.

1 Introduction

1.1 Terms of Reference

Mott MacDonald was commissioned by Severn Trent Water to provide an arboricultural survey to identify the tree constraints associated with the proposed installation of a new steel framed building at the existing Poolend BPS site, Macclesfield Road, Poolend, Leek, ST138SG. The report also identifies the trees for removal prior to construction works and trees that require barrier protection during the proposed works. An Arboricultural Method Statement is incorporated into the report, stating the sequence of activities on site and methods of protecting and working adjacent to retained trees to ensure all retained trees remain in good health, during and after construction works.

1.2 Scope of Works

The initial phase of construction works associated with this project are nearing completion on site. These works include:

- installation of a steel framed building containing a new caustic soda dosing system, water softening system and chlorine gas dosing system.
- modification of the existing site access to allow a tanker to pull off the road before opening a new set of gates to access the new development; and,
- construction of a concrete bunded salt saturator, concrete paved chemisafe delivery area and tarmacked tanker turning area.

The next phase of proposed works, addressed by this revision of the arboricultural report (Rev E), will involve:

- installation of a new borehole in the south of the site;
- installation of a temporary filtration building in the north west corner; and,
- decommissioning of Bore Hole BH1

This stage of the proposed works will not alter the ground levels at site.

1.3 Tree Assessment Methodology

The tree survey was carried out by a qualified Mott MacDonald Arboriculturalist on 17th February 2015 to assess the quality and value of the principal trees within or adjacent to the footprint of the proposed Scheme.

The survey was undertaken in accordance with the guidelines set out in '*BS 5837:2012 Trees in relation to design, demolition and construction - Recommendations'*. The tree data contained within the Tree Survey Schedule (Appendix C) was recorded by visual survey from ground level and no invasive tree inspection measures were employed.

The survey process categorises the trees on site, selects those appropriate for retention, reviews the options for incorporating these trees within the developed landscape and provides a finalised methodology for tree protection during construction. The survey provides comment on the general quality of the trees but does not constitute a full or thorough assessment of the health and safety of trees on or adjacent to the site.

The full Tree Survey Schedule and categorisation of the trees in their existing context is stated in Appendix C. The Root Protection Area (RPA) calculations are provided in Appendix D.

In accordance with BS 5837:2012, the following information was recorded for each tree:

- Sequential reference number (to be recorded on the tree constraints plan).
- Species listed by common name, with key provided to scientific name.
- Life stage recorded as:

Table 1.1: Life stage categories

Abbreviation	Life Stage	Description
Y	Young	Trees aged less than 1st quarter of their life expectancy
SM	Semi Mature	Trees within 2nd quarter of their life expectancy
EM	Early mature	Trees within 3rd quarter of their life expectancy
M	Mature	Trees aged within final quarter of their life expectancy
OM	Over Mature	Over-mature - declining or moribund trees of low vigour
V	Veteran	Specimens exhibiting features of biological, cultural or aesthetic value that are characteristic of, but not exclusive to, individuals surviving beyond the typical age range for the species concerned

- Height (metres).
- Crown spread (metres), taken as a minimum at the four cardinal points, to derive an accurate representation of the crown (plotted on the tree constraints plans).
- Existing height (metres) above ground level of:
  - First significant branch; and,
  - Canopy.
- Stem diameter (millimetres) in accordance with Annex C of BS 5837:2012. The stem diameters of single stemmed trees were measured at 1.5 metres above ground level and multi-stemmed trees measured in accordance with Annex C.
- The Root Protection Area (RPA) calculated in accordance with Section 4.6 of BS 5837:2012. The two measurements provided are a 'Root Protection Radius (m)' (circle centred on the base of the stem) and an overall 'root protection area (m^2)'.
- General observations, particularly of structural and/or physiological condition (e.g. the presence of any decay and physical defect), and/or preliminary management recommendations.
- Estimated remaining contribution, in years (<10, 10 +, 20+, 40+).
- Retention category recorded as A, B, C or U in accordance with Section 4.5 and Table 1 and Table 2 of BS 5837:2012 to be recorded on the tree survey plan (Appendix B). This gives an indication as to each tree's arboricultural, landscape and cultural value and significance as well as its' suitability for retention in the context of the proposed redevelopment of the site. The sub-categories [1 - Arboricultural values; 2 - Landscape values and 3 - Cultural values, including conservation] are included where considered

necessary to clarify why a tree has been assigned to a particular retention category. These categorisation criteria are summarised below:

Table 1.2: Retention Categories

Category	Description
Category A	Trees of high quality and value whose retention is most desirable (suggested minimum contribution 40 years)
Category B	Trees of moderate quality and value whose retention is desirable if practicable (suggested minimum contribution 20 years)
Category C	Trees of low quality and value or limited long-term potential, which could be retained if not in conflict with development proposals or young trees with a stem diameter of less than 150 mm (suggested minimum contribution 10 years)
Category U	Trees requiring removal irrespective of any development proposals due to significant structural defects, irreversible decline or with a very short-term life expectancy of less than 10 years

1.4 Limitation of the Survey

The survey was undertaken utilising the designs highlighted within the Tree Protection Plan drawing A6W11410-SA01031 (Appendix A.2). The trees surveyed are within the Scheme extents that may be affected by the proposed construction.

This report is not, nor should be taken to be, a full or thorough assessment of the health and safety of trees on or adjacent to the site. It is recommended that a full tree survey should be undertaken on a regular basis to satisfy health and safety requirements. Previous management and/or surveys in relation to the health and safety of trees on this site have not been taken into account as part of this report.

2 Tree Summary

2.1 Overview

There are 52 individual trees within the area surveyed at the Poolend Severn Trent Water site.

The majority of trees surveyed are within a single mixed group of conifers located south of the existing buildings. These trees serve as a screen blocking the view to the existing site from the south and providing landscape integration for the structures of the current complex. Directly to the north of the mainbody of trees is a large area of trees that have recently been felled.

The majority of trees are early mature in age class having been planted around the same time. The dominant species on site are Scots Pine (*Pinus sylvestris*). These form the majority of the group surveyed however the occasional oak (*Quercus robur*) and ash (*Fraxinus excelsior*) are also present.

The trees are generally of fair condition exhibiting characteristics of plantation trees of this species e.g. tall trees with limited mid and lower crown development, predominately single stemmed speices with occasional co-dominant leaders and contorted branches in the upper crowns. The trees along the eastern boundary are predominatley deciduous offering some diversity.

Of the trees on site one (16) has been awarded the retention category A (a tree of high quality) due to its size, maturity and good health. There are 36 individual trees recorded as category B (trees of moderate quality) due to their arboricultural value and there are 13 individual trees assessed as category C (trees of low quality). There also are 2 category U trees i.e. trees for removal on arboricultural grounds.

2.2 Summary of Retention Categories

Of the 52 individual trees on site, the following provides a summary of their quality and value as assessed in accordance with BS5837:2012:

Table 2.1: Summary of BS 5837:2012 tree categories assigned

Tree Category	Description	Total Number surveyed
Category A	Trees or groups of high quality and value	1 individual tree
Category B	Trees or groups of moderate quality and value	36 individual trees
Category C	Trees or groups of low quality and value	13 individual trees
Category U	Trees or groups not suitable for retention	2 individual trees

3 Implications for Proposal

3.1 Tree Preservation Orders (TPO) and Conservation Areas (CA)

The primary measures which provide statutory protection to trees are Tree Preservation Orders (TPOs) and Conservation Area (CA) status. Where present, these measures determine that either notification to the Local Planning Authority (LPA) for CA designations or consent from the LPA for TPO designations is required for any works that may affect trees or tree groups.

A check with the LPA has not been undertaken to determine if any of the trees fall within a CA or are protected by a TPOs. It is recommended that prior to further tree felling operations a check must be undertaken prior to works commence, and permissions sought as appropriate.

3.2 Protection of Root Protection Areas (RPA)

Working anywhere in the vicinity of trees is likely to cause some root damage due to the fact that in the order of 80% of the roots of any tree will occur within the upper 600mm of the soil. Roots will spread out for a considerable distance from a tree and may be encountered at a distance beyond the canopy spread of a tree. Where construction activities are proposed within the rooting zone of trees, the potential for significant damage exists.

Table 2 of BS 5837:2012 prescribes a methodology for the calculation of an RPA. The RPA represents the minimum area that should be retained undisturbed around a tree or trees for the avoidance of an unacceptable degree of root disturbance. The required RPA of a tree is calculated, and typically plotted as a circle (or where appropriate as a square of equivalent area) to determine constraints or the location of protective fencing. In certain circumstances the actual shape of this area may then be adjusted to take account of local topography or any existing site features that may serve as restrictions to 'normal' root development.

The RPA calculations are stated within Table D.1, Appendix D.

3.3 Risk to Trees from General Works Activities

Trees can be easily damaged by site works, with both the tree roots and the main structure of a tree susceptible to a range of impacts. Root damage can affect the anchorage and stability of the tree, as well as preventing or inhibiting the absorption of water and nutrients. Damage to the trunk and branches leaves the tree more exposed to disease and decay.

Any activities required as part of the proposed works that could affect the existing trees as described below, must be discussed and approved by a qualified Arboriculturalist prior to commencement:

Activities that can cause damage to tree roots include:

- Trenches;
- Alterations in soil level;
- Non-porous surfaces;

- Compaction of soil;
- Changes in soil hydrology;
- Root exposure;
- Soil pollution (i.e. oil spill, incorrect application of herbicide and/or other chemicals); and,
- Fires.

Activities that can cause damage to tree trunks and branches include:
- Pressure from materials stored against trunks;
- Physical impact from plant and equipment;
- Incorrect pruning;
- Exposure of bark or leaves to chemicals; and,
- Damage to bark from mowers and strimmers.

3.4 Protective Barriers General

Access into the RPA should not be required during the works. Protective fences must ideally be constructed in accordance with BS 5837:2012 and be fit for the purpose of excluding any construction activity (refer to Appendix E, Extract from BS 5837:2012). Any other fence/barrier used must be approved by the Arboriculturalist prior to installation.

All weather notices should be erected on the barrier with words such as:

“Tree Protection Area — Keep out”.

The following prohibitions shall apply within the area enclosed by the Tree Protection Barriers:
- No mechanical digging or scraping;
- No storage of plant, equipment or materials;
- No vehicular or plant access;
- No action likely to cause localised water-logging;
- No alteration of ground levels;
- No construction of hard surfaces;
- No attachment of boards, hoarding, cables or notices or fencing to trees; and,
- No storage of excavated materials.

In addition, there should be:
- No fire lighting within 10m of tree canopies; and,
- No handling, discharge or spillage of any chemical substance, including cement washings and vehicle washings within 10m of an RPA;

Special care is to be taken on sloping ground where spillages could run towards the trees. A collecting channel dug along the outer line of the protective fencing would be one method of avoiding such damage.

If excavators are to be used during construction, at no time is the excavating arm to encroach over the position of the tree protection barriers.

3.5 Precautions in Respect of Temporary Works

If temporary access is required to a RPA then access may only be gained after consultation with the Arboriculturalist and Local Planning Authority and following placement of materials such as concrete slabs, scaffold boards or geo-textile fabrics that will spread the weight of any load and prevent compaction to the soil.

3.6 Sequence of Activities

To ensure adequate protection for the trees the following order of activities will be followed:

- Undertake any tree surgery works (subject to such ownership and Local Planning Authority consents as may be appropriate);
- Erect tree protective fencing in accordance with attached plans and specifications;
- Inform Local Planning Authority Tree Officer that tree protective fence has been erected;
- Brief all site operatives, visitors and sub-contractors on the presence of tree protective fencing and the need to ensure that all operations remain wholly outside the protected areas as part of site induction procedures;
- Main site operations – construction phase; and,
- Removal of temporary protective fencing (once all site operations have ceased).

During the main site operations the following rules must be adhered to:

- Retain and maintain tree protective fencing as erected during the full duration of the construction building works;
- No works to take place on the “tree side” of the fence;
- Tree roots extending beyond the protective fencing exposed by excavation works are to be pruned properly using secateurs or a sharp saw;
- Exposed roots shall be covered by moist hessian until they are reburied using a good quality top soil or a top soil and sharp sand mix; and,
- No signs, notices, cables or other objects shall be fixed to any part of a retained tree.

3.7 Arboricultural Inspection

On completion of the development, an Arboriculturalist must look for signs of intolerance to the change in conditions and/or, any accidental damage to retained trees to identify the need for additional tree works to those originally specified at the beginning of the project.

3.8 Environmental Law

It should be noted that the Contractor will be responsible under the Wildlife and Countryside Act 1981 (as amended), and the Conservation of Habitat Regulations 2010 (as amended), and the Countryside Rights

of Way Act 2000, to take all reasonable action to identify the presence of protected species including nesting birds, bats, dormice and reptiles in the works area/surroundings, and comply fully with the law in relation to impacts associated with any instructed works.

3.9 Services

The installation of services or ducting within the RPA of retained trees should be carried out following the guidelines in The National Joint Utilities Group, Issue 2 – 16 November 2007, Volume 4 – Guidelines for the Planning, Installation and Maintenance of Utility Apparatus in Proximity to Trees.

4 Recommendations

The construction works at this site must be undertaken in accordance with Tree Protection Plan A6W/11410-SA01031 (Appendix A.2) and the guidance detailed below.

4.1 Tree Removal

21 individual trees (2, 3, 4, 5, 6, 7, 8, 9, 26, 27, 28, 29, 30, 31, 32, 33, 34, 48, 49, 50 and 51) have been recommended for removal on this site because they are in direct conflict with the Scheme footprint. 15 have been assessd as Category B i.e. trees of moderate retention value , 5 have been assessed as Category C i.e. trees of low retention value and one tree has been assessed as Category U i.e. a tree to be removed due to health/condition. The majority of trees identified for removal are early mature pine trees. One tree (17) has been assessed as Category U i.e. a tree to be removed due to its condition/health. This tree is not affected by the Scheme and therefore the decision to remove these additional trees falls to the land owner.

4.2 Barrier Protection

11 individual trees (19, 20, 21, 22, 23, 24, 25, 35, 45, 46 and 47) should be protected with temporary protective barrier in accordance with BS5837:2012 to stop any encroachment into the RPA or crown area of the trees. The indicative alignment of the temporary barrier protection is shown in Tree Protection Plan (Appendix A.2). All of the remaining trees along the southern boundary are adequately protected by the presence of the new inner fencline around the main infrastructure of the site and adjacent to the access road.

Individual protection for the above ground structure of 6 individual trees (1, 10, 11, 12, 13 and 15) has also been specified to enable construction of the south central area of the site. This protection is to take the form of a robust plywood box built around each trunk (360 degrees) to prevent mechanical/physical damage. The RPAs of these 6 trees are to be protected by an appropriate ground protection system (to be agreed with the Scheme arboriculturalist) to prevent compaction of the rooting zones and enable temporary construction access in close proximity to the the retained trees.

4.3 Tree Pruning

No trees have been specified for any tree pruning works. If any trees require pruning once construction begins to ensure no branches are ripped or torn during the project the proposed works should be approved by the Scheme arboriculturalist prior to any tree work commencing and must be carried out in accordance with *BS3998:2010 Tree Works - Recommendations*.

4.4 Construction Within the RPA

With the exception of the trees to be protected by ground protection no trees will require works within their RPAs. However, it is recommended that if any roots <25mm are encountered during any excavations they should be pruned with a sharp saw or secateurs. Any roots encountered >25mm should not be pruned without prior consultation with the arboriculturalist. Roots, whilst exposed, should immediately be wrapped

or covered to prevent desiccation and to protect them from rapid temperature changes. Any wrapping should be removed prior to backfilling, which should take place as soon as possible. Prior to backfilling, retained roots should be surrounded with topsoil or uncompacted sharp sand (builders' sand should not be used because of its high salt content, which is toxic to tree roots), or other loose inert granular fill, before soil or other suitable material is replaced. This material should be free of contaminants and other foreign objects potentially injurious to tree roots.

5 Conclusions

There are 52 individual trees within the area for the proposed construction works.

Of the trees surveyed, the following categories were assigned:

- Category A i.e. trees of high quality; 1 individual trees
- Category B i.e. trees of moderate quality; 36 individual trees
- Category C i.e. trees of low quality; 13 individual trees
- Category U i.e. trees for removal; 2 individual

The majority of trees surveyed are located in a group of single species conifers to the south of the existing Severn Trent Water site. The dominant species on site is Scots pine (*Pinus sylvestris*)although other species including ash (*Fraxinus excelsior*) and oak (*Quercus robur*) do occur. The majority of trees have been recorded as early mature in age class as most have been planted at a similar time. The group provides some screening value for the existing site, hiding the buildings from the surrounding countryside and adjacent road.

To allow the Scheme to progress 21 individual trees will need removal as they are in direct conflict with the footprint. These trees are predominately early mature trees planted at similar times. Of the trees recommended for removal 15 have been assessed as Category B trees, 5 have been assessed as Category C trees and one tree has been assessed as Category U i.e. for removal on arboricultural grounds. The one Category U tree (17) is not affected by the Scheme and therefore the decision to remove this tree falls to the land owner.

11 individual trees (19, 20, 21, 22, 23, 24, 25, 35, 45, 46 and 47) should be protected with temporary protective barrier in accordance with BS5837:2012 to stop any encroachment into the RPA or crown area of the trees. All of the remaining trees along the southern boundary are adequately protected by the presence of the new inner fencline around the main infrastructure of the site and adjacent to the access road.

Due to the close proximity of the design footprint and the existing trees it is essential that protective barriers are installed correctly in order to protect the remaining trees during construction.

Individual protection for the above ground structure of 6 individual trees (1, 10, 11, 12, 13 and 15) has also been specified to enable construction of the south central area of the site. This protection is to take the form of a robust plywood box built around each trunk (360 degrees) to prevent mechanical/physical damage.

On completion of the development, an Arboriculturalist should inspect the retained trees to identify any:

- Signs of intolerance to the change in conditions and/or the effect of the development; and,
- Accidental damage that may have occurred as a result of the construction works.

Following this inspection, a tree works specification may be required for remedial works necessary to address any issues identified.

Appendices

Appendix A. Drawings 13
Appendix B. Key to Tree Survey Schedule 15
Appendix C. Tree Survey Schedule 16
Appendix D. Root Protection Area Calculations 20
Appendix E. Temporary Protective Fencing 22
Appendix F. Glossary 25
Appendix G. References 26

Appendix A. Drawings

A.1 Tree Constraints Plan



Plan
1 : 250

0 12.5m 25m
1:250

© Mott MacDonald Bentley Limited

This document should not be relied on or used in circumstances other than those for which it was originally prepared and for which Mott MacDonald Bentley Ltd was commissioned. Mott MacDonald Bentley Ltd accepts no responsibility for this document to any other party other than the person by whom it was commissioned.

Purpose of issue	For discussion only

Significant risks (Health, Safety and Environmental)

Notes

1. All dimensions are in millimetres unless otherwise stated.
2. Do not scale any items or information from this drawing.
3. To be read in conjunction with Poolend Arboricultural Survey Report (July 2016) ref.344035 NH06/HWY/HDS/001/E.

Key to symbols

- 28 Tree Reference
- Approximate extent of canopy
- Tree Root Protection Area (RPA)

Individual Trees

- Ungraded
- Grade A Trees
- Grade B Trees
- Grade C Trees
- Grade U Trees to be removed for reasons of sound arboricultural management

Tree Groups

- Grade A Trees
- Grade B Trees
- Grade C Trees

Scale reference

Rev	Date	Description	Author	T. Chk	B.Chk	App'd
B	08/07/2016	First Issue	DL	RL	SD	CP
A	19/02/2015	First Issue	DL	RL	SD	CP

SEVERN TRENT WATER

MMB Mott MacDonald Bentley Limited

One Supply Chain - Non-Infrastructure Delivery Team

Telephone - 01952 468210
Facsimile - 01952 468211
E-mail - info@mm-b.co.uk
Website - www.mm-b.co.uk

Lamledge Lane,
Shifnal,
Shropshire,
TF11 8SD

Title
Poolend

Tree Constraints Plan

Site Address : Poolend BPS, Macclesfield Road, Poolend, Staffordshire, ST13 8SQ

OS Grid Ref : SJ 965 582

Scale at A1
1:250

MMB File Ref: A6W11410-SA01030

File Location: pw:\\...\N Contracts\NH06 - Poolend Highgate

Drawing No
A6W/11410-SA01030

Rev
B

Status
PRE

A.2 Tree Protection Plan



Note:
Specification for proposed ground protection to be agreed with project Arboriculturalist prior to ordering/installation.

Plan
1 : 250

1:250 0 12.5m 25m

© Mott MacDonald Bentley Limited

This document should not be relied on or used in circumstances other than those for which it was originally prepared and for which Mott MacDonald Bentley Ltd was commissioned. Mott MacDonald Bentley Ltd accepts no responsibility for this document to any other party other than the person by whom it was commissioned.

Purpose of issue	For discussion only

Significant risks (Health, Safety and Environmental)

Notes

1. All dimensions are in millimetres unless otherwise stated.
2. Do not scale any items or information from this drawing.
3. To be read in conjunction with Poolend Arboricultural Survey Report (July 2016) ref.344035 NH06/HWY/HDS/001/E.

Key to symbols

- 28 Tree Reference
- Approximate extent of canopy
- Tree Root Protection Area (RPA)
- Tree to be removed
- Protective Barrier
- Plywood box to protect tree trunk
- Ground protection to protect RPA's of retained trees

Individual Trees
- Ungraded
- Grade A Trees
- Grade B Trees
- Grade C Trees
- Grade U Trees to be removed for reasons of sound arboricultural management

Tree Groups
- Grade A Trees
- Grade B Trees
- Grade C Trees

Scale reference

Rev	Date	Description	Author	T. Chk	B.Chk	App'd
E	15/07/16	Amendments to design layer	DL	RL	JS	CP
D	29/05/15	Inclusion Of Brine Waste Tank	SMW	PP	-	JC
C	06/05/2015	Tree's revised	DL	RL	SD	CP
B	28/04/2015	Tree's revised	DL	RL	SD	CP
A	22/04/2015	First Issue	DL	RL	SD	CP

SEVERN TRENT WATER
MMB Mott MacDonald Bentley Limited
One Supply Chain - Non-Infrastructure Delivery Team
Telephone - 01952 468210
Facsimile - 01952 468211
E-mail - info@mm-b.co.uk
Website - www.mm-b.co.uk
Lamledge Lane,
Shifnal,
Shropshire,
TF11 8SD

Title
Poolend

Tree Protection Plan

Site Address : Poolend BPS, Macclesfield Road, Poolend, Staffordshire, ST13 8SQ

OS Grid Ref : SJ 965 582

Scale at A1 1:250

MMB File Ref: A6W11410-SA01031

File Location: pw:\\...\N Contracts\NH06 - Poolend Highgate

Drawing No A6W/11410-SA01031

Rev E

Status INF

Appendix B. Key to Tree Survey Schedule

Key to Tree Survey Schedule		
Tree Reference	Unique reference or Tree Tag number, identifying each tree and/or tree group on the accompanying plan/s.	
Species	Tree species giving the vernacular and full botanic name.	
Height	Recorded in metres, measured in m from the base of the tree.	
Stem Diameter	Tree trunk diameter measured at 1.5m above ground level (on sloping ground above highest ground level) or immediately above root flare for multi-stemmed trees. Expressed in millimetres. (est) dimension estimated; (av) average or max maximum dimension used in groups.	
Branch Spread	Tree canopy extent taken from centre of tree trunk to edge of general canopy line along the four principal points of the compass (note this distance is to the general canopy line in certain cases and that an exceptional or etiolated branch may extend beyond stated figure).	
Crown Clearance	Existing height above ground level of 1) first significant branch and direction of growth (e.g. 2.4 N); and 2) canopy, to inform on ground clearance, crown/stem ratio and shading. Measured in m (rounded up to nearest half metre for dimensions up to 10m and up to nearest metre fordimensions over 10m.	
Life Stage	Estimated life expectancy assessed in accordance with figures provided in Arboricultural Association Leaflet No. 4 tree Management. Note: these age classes may be pre-fixed with 'Early' or 'Late' in the Tree Survey Schedule to provide a more accurate indication of age.	
	Y	Young:within first quarter of normal life expectancy.
	SM	Semi Mature: within second quarter of normal life expectancy.
	EM	Early Mature: within third quarter of normal life expectancy.
	M	Mature: within final quarter of normal life expectancy.
	OM	Over Mature: senescent trees nearing end of their anticipated life expectancy.
	V	Veteran: exhibiting features of biological, cultural or aesthetic value characteristic of individuals surviving beyond typical age range
	D	Dead.
General Observations	Observations particularly of structural and/or physiological condition (e.g. the presence of any decay and physical defect), and/or preliminary management recommendations.	
Estimated Remaining Contribution	Relates to the potential life expectancy of the tree in its current setting, shown in years as one of the following categories: <10; 10+; 20+; and, 40+.	
Category Grading in accordance with Table 1 (BS 5837:2012)	Tree categorisation as defined by Table 1 – Cascade chart for tree quality assessment of British Standard 5837:2005. Decisions regarding which trees are to be retained should be influenced by their retention categories as suggested below.	
	A	Trees of high quality and value; > 40 years contribution remaining; marked light green on plan. Category is sub-divided as follows: 1 particularly good example; essential component of group e.g. in avenues; 2 screening value, particular visual importance 3 significant conservation, historical, commemorative or other value (includes veteran or wood pasture trees). **Tree retention is highly desirable**: s**ignificant amendments to any proposed development should be considered before removing these trees**
	B	Trees of moderate quality and value with a significant life expectancy; > 20 years contribution remaining; marked mid-blue on plan. Category sub-divided as follows: **1** Trees that may be of impaired condition in relation to trees in category above; **2** Trees present in numbers/groups attracting higher collective rating; internal to site, of limited visual impact to locality; **3** Trees with clear conservation or cultural benefits. **Tree retention is desirable: amendments to any proposed development should be considered before removing these trees.**
	C	Trees of low quality and value; >10 years contribution remaining; marked grey on plan. Includes young trees below 150mm diameter (to which consideration for transplanting should be given). Note that “C” trees will usually not be retained where they would impose a significant constraint on development. Category sub-divided as follows: **1** Trees not qualifying in higher categories; **2** Trees within groups of low landscape value, having limited screening value; **3** Trees with very limited conservation or other cultural benefits. **Trees could be retained however the removal of some of these trees should be considered acceptable if required to facilitate any proposed development.**
	U	Trees for removal; those in such a condition that are dead, dying, dangerous, severely suppressed or where any existing value would be lost within 10 years; marked dark red on plan. **These trees should be removed or treated in such a way as to make them safe where they have high ecological value or benefits.**

Appendix C. Tree Survey Schedule

Table C.1: Tree Survey Schedule

Tag No	Tree Type	Life Stage	Height (m)	Crown Spread (m)				Crown Height					No of Stems	Stem Diameter (mm)	Root Protection Area (RPA)		Condition				BS5837 Category		Useful remaining contribution (years)	Comment
				N	E	S	W	1st branch (m)	N	E	S	W			RPA Radius (m)	RPA (m2)	Crown	Stem	Basal Area	General Physical	Category	Sub Category		
1	Oak	Mature	16	7	7	7	7	4	6	6	6	6	1	570	6.8	147	Fair	Fair	Good	Fair	B	1;2	20+	Adjacent road boundary, some snapped limbs and branch stubs in lower crown.
2	Scots Pine	Early mature	20	3	3	3	3	14	14	14	14	14	1	365	4.4	60.3	Fair	Good	Good	Fair	B	1;2	20+	
3	Scots Pine	Early mature	20	2	2	2	2		15	15	15	15	1	340	4.1	52.3	Fair	Fair	Good	Fair	B	1;2	20+	Codominant from 16m
4	Scots Pine	Young	9	1.5	1.5	1.5	1.5	5	5	5	5	5	1	170	2	13.1	Fair	Fair	Fair	Fair	C	1	20+	
5	Scots Pine	Semi mature	18	1	1	1	1	15	15	15	15	15	1	245	2.9	27.2	Poor	Fair	Fair	Fair	C	1	10+	
6	Scots Pine	Early mature	20	4	4	4	4	13	14	14	14	14	1	410	4.9	76.1	Fair	Good	Good	Good	B	1;2	20+	
7	Scots Pine	Early mature	20	1.5	1.5	1.5	1.5	14	15	15	15	15	1	230	2.8	23.9	Poor	Fair	Good	Fair	C	1	10+	
8	Scots Pine	Early mature	18	3	2	2	2	15	15	15	15	15	1	325	3.9	47.8	Fair	Good	Good	Fair	B	1;2	20+	
9	Scots Pine	Early mature	20	3	3	3	3	14	15	15	15	15	1	400	4.8	72.4	Fair	Good	Good	Fair	B	1;2	20+	
10	Scots Pine	Early mature	18	3	3	2	1.5	14	14	14	14	14	1	360	4.3	58.6	Fair	Fair	Good	Fair	B	1;2	20+	
11	Scots Pine	Mature	16	8	8	8	8	1.5e	4	4	4	4	1	650	7.8	191.2	Good	Fair	Good	Fair	A	1;2	20+	Epicormic throughout crown, adjacent road boundary, high category 'B', should be retained over pines.
12	Scots Pine	Semi mature	15	0.5	5	5	0.5	3e	5	5	5	5	1	270	3.2	33	Fair	Fair	Good	Fair	C	1	10+	Suppressed by oak.
13	Scots Pine	Semi mature	14	2.5	2.5	2.5	2.5	8	8	8	8	8	1	215	2.6	20.9	Good	Fair	Good	Good	B	1;2	20+	
14	Scots Pine	Early mature	18	4	4	4	4	10	10	10	10	10	1	420	5	79.8	Fair	Good	Good	Good	B	1;2	20+	
15	Scots Pine	Mature	20	5	5	5	5	6e	10	10	10	10	1	510	6.1	117.7	Good	Good	Good	Good	B	1;2	20+	
16	Oak	Mature	15	8	8	8	8	1.8s	3	3	3	3	1	570	6.8	147	Fair	Good	Good	Fair	A	1;2	20+	Epicormic throughout crown.
17	Scots Pine	Young	4	3	3	3	3		2	2	2	2	1	195	2.3	17.2	Poor	Poor	Fair	Decline	U	1	<10	Supressed and contorted tree.
18	Scots Pine	Mature	18	5	5	5	5	5	10	10	10	10	1	495	5.9	110.9	Good	Good	Good	Good	B	1;2	20+	
19	Scots Pine	Semi mature	16	4	4	4	4	4s	4	4	4	4	1	345	4.1	53.9	Fair	Good	Good	Good	B	1;2	20+	
20	Scots Pine	Early mature	20	3	3	3	3	1	3	3	3	3	1	290	3.5	38.1	Fair	Fair	Fair	Fair	B	1;2	20+	
21	Scots Pine	Early mature	20	3	3	3	3	1	3	3	3	3	1	445	5.3	89.6	Fair	Fair	Fair	Fair	B	1;2	20+	
22	Scots Pine	Early mature	20	3	3	3	3	1	3	3	3	3	1	365	4.4	60.3	Fair	Fair	Fair	Fair	B	1;2	20+	
23	Scots Pine	Early mature	20	3	3	3	3	1	3	3	3	3	1	350	4.2	55.4	Fair	Fair	Fair	Fair	B	1;2	20+	
24	Scots Pine	Early mature	20	3	3	3	3	1	3	3	3	3	1	375	4.5	63.6	Fair	Fair	Fair	Fair	B	1;2	20+	
25	Scots Pine	Early mature	20	3	3	3	3	1	3	3	3	3	1	400	4.8	72.4	Fair	Fair	Fair	Decline	C	1;2	10+	Top snapped out.
26	Scots Pine	Early mature	20	3	3	3	3	1	3	3	3	3	1	400	4.8	72.4	Fair	Fair	Fair	Fair	B	1;2	20+	
27	Scots Pine	Early mature	20	3	3	3	3	1	3	3	3	3	2	175	3.2	32	Fair	Fair	Fair	Fair	B	1;2	20+	
28	Scots Pine	Early mature	20	3	3	3	3	1	3	3	3	3	1	350	4.2	55.4	Fair	Fair	Fair	Decline	U	1	<10	Top snapped out, no specific crown area left.
29	Scots Pine	Early mature	20	3	3	3	3	1	3	3	3	3	1	315	3.8	44.9	Fair	Fair	Fair	Fair	B	1;2	20+	
30	Scots Pine	Early mature	20	3	3	3	3	1	3	3	3	3	1	315	3.8	44.9	Fair	Fair	Fair	Fair	B	1;2	20+	
31	Scots Pine	Early mature	20	3	3	3	3	1	3	3	3	3	1	390	4.7	68.8	Fair	Fair	Fair	Fair	B	1;2	20+	
32	Scots Pine	Early mature	20	4	4	4	4	1	4	4	4	4	1	400	4.8	72.4	Fair	Fair	Fair	Fair	B	1;2	20+	
33	Scots Pine	Early mature	20	3	3	3	3	1	3	3	3	3	1	300	3.6	40.7	Fair	Fair	Fair	Fair	B	1;2	20+	
34	Scots Pine	Early mature	20	3	3	3	3	1	3	3	3	3	1	200	2.4	18.1	Fair	Fair	Fair	Fair	C	1	10+	Very limited crown area, contorted upper stem.
35	Scots Pine	Early mature	20	3	3	3	3	1	3	3	3	3	1	350	4.2	55.4	Fair	Fair	Fair	Fair	B	1;2	20+	
36	Common Ash	Young	20	3	3	3	3	1	3	3	3	3	1	200	2.4	18.1	Poor	Fair	Good	Fair	C	1	10+	Suppressed, no long term future.
37	Scots Pine	Early mature	20	3	3	3	3	1	3	3	3	3	1	480	5.8	104.2	Fair	Fair	Fair	Fair	B	1;2	20+	

Tag No	Tree Type	Life Stage	Height (m)	Crown Spread (m)				Crown Height					No of Stems	Stem Diameter (mm)	Root Protection Area (RPA)		Condition				BS5837 Category		Useful remaining contribution (years)	Comment
				N	E	S	W	1st branch (m)	N	E	S	W			RPA Radius (m)	RPA (m2)	Crown	Stem	Basal Area	General Physical	Category	Sub Category		
38	Scots Pine	Early mature	20	3	3	3	3	1	3	3	3	3	1	220	2.6	21.9	Poor	Fair	Fair	Decline	C	1	10+	
39	Scots Pine	Early mature	20	3	3	3	3	1	3	3	3	3	1	400	4.8	72.4	Fair	Fair	Fair	Fair	B	1;2	20+	
40	Scots Pine	Early mature	20	3	3	3	3	1	3	3	3	3	1	330	4	49.3	Fair	Fair	Fair	Fair	C	1;2	10+	One sided crown.
41	Scots Pine	Early mature	20	4	4	4	4	1	4	4	4	4	1	485	5.8	106.4	Fair	Fair	Fair	Fair	B	1;2	20+	
42	Scots Pine	Early mature	20	3	3	3	3	1	3	3	3	3	1	310	3.7	43.5	Fair	Fair	Fair	Fair	B	1;2	20+	
43	Scots Pine	Early mature	20	3	3	3	3	1	3	3	3	3	1	405	4.9	74.2	Fair	Fair	Fair	Fair	B	1;2	20+	
44	Scots Pine	Early mature	20	3	3	3	3	1	3	3	3	3	1	230	2.8	23.9	Fair	Fair	Fair	Fair	C	1;2	10+	
45	Scots Pine	Early mature	20	3	3	3	3	1	3	3	3	3	1	305	3.7	42.1	Fair	Fair	Fair	Fair	B	1;2	20+	
46	Scots Pine	Early mature	20	5	5	5	5	1	5	5	5	5	1	530	6.4	127.1	Fair	Fair	Fair	Fair	B	1;2	20+	
47	Scots Pine	Early mature	12	3	3	3	3	2	3	3	3	3	1	390	4.7	68.8	Fair	Fair	Good	Fair	C	1;2	10+	
48	Scots Pine	Early mature	20	3	3	3	3	1	3	3	3	3	1	485	5.8	106.4	Fair	Fair	Fair	Fair	B	1;2	20+	
49	Scots Pine	Early mature	20	3	3	3	3	1	3	3	3	3	1	320	3.8	46.3	Fair	Fair	Fair	Fair	B	1;2	20+	
50	Scots Pine	Early mature	20	3	3	3	3	1	3	3	3	3	1	330	4	49.3	Fair	Fair	Fair	Fair	B	1;2	20+	
51	Scots Pine	Early mature	20	3	3	3	3	1	3	3	3	3	1	360	4.3	58.6	Poor	Fair	Fair	Decline	C	1	10+	
52	Scots Pine	Early mature	20	3	3	3	3	1	3	3	3	3	1	285	3.4	36.8	Fair	Fair	Fair	Fair	C	1;2	10+	Contorted upper stem.

Appendix D. Root Protection Area Calculations

Table D.1: Root Protection Area Calculations in accordance with BS 5837:2012

Tree	Species	Stem Diameter (mm)	*RPA Circle Radius (m)	*RPA (m2)
1	Oak	125	6.8	147
2	Scots Pine	570	4.4	60.3
3	Scots Pine	365	4.1	52.3
4	Scots Pine	340	2	13.1
5	Scots Pine	170	2.9	27.2
6	Scots Pine	245	4.9	76.1
7	Scots Pine	410	2.8	23.9
8	Scots Pine	230	3.9	47.8
9	Scots Pine	325	4.8	72.4
10	Scots Pine	400	4.3	58.6
11	Scots Pine	360	7.8	191.2
12	Scots Pine	650	3.2	33
13	Scots Pine	270	2.6	20.9
14	Scots Pine	215	5	79.8
15	Scots Pine	420	6.1	117.7
16	Oak	510	6.8	147
17	Scots Pine	570	2.3	17.2
18	Scots Pine	195	5.9	110.9
19	Scots Pine	495	4.1	53.9
20	Scots Pine	345	3.5	38.1
21	Scots Pine	300	5.3	89.6
22	Scots Pine	290	4.4	60.3
23	Scots Pine	280	4.2	55.4
24	Scots Pine	285	4.5	63.6
25	Scots Pine	345	4.8	72.4
26	Scots Pine	n/a	4.8	72.4
27	Scots Pine	255	3.2	32
28	Scots Pine	245	4.2	55.4
29	Scots Pine	290	3.8	44.9
30	Scots Pine	315	3.8	44.9
31	Scots Pine	445	4.7	68.8
32	Scots Pine	285	4.8	72.4
33	Scots Pine	365	3.6	40.7
34	Scots Pine	350	2.4	18.1
35	Scots Pine	150	4.2	55.4
36	Common Ash	375	2.4	18.1
37	Scots Pine	400	5.8	104.2
38	Scots Pine	285	2.6	21.9

Tree	Species	Stem Diameter (mm)	*RPA Circle Radius (m)	*RPA (m2)
39	Scots Pine	400	4.8	72.4
40	Scots Pine	175	4	49.3
41	Scots Pine	350	5.8	106.4
42	Scots Pine	315	3.7	43.5
43	Scots Pine	315	4.9	74.2
44	Scots Pine	390	2.8	23.9
45	Scots Pine	400	3.7	42.1
46	Scots Pine	300	6.4	127.1
47	Scots Pine	200	4.7	68.8
48	Scots Pine	350	5.8	106.4
49	Common Ash	200	3.8	46.3
50	Scots Pine	480	4	49.3
51	Scots Pine	220	4.3	58.6
52	Scots Pine	400	3.4	36.8

Appendix E. Temporary Protective Fencing

E.1 Extract from BS5837:2012 Default Specification for Protective Barrier

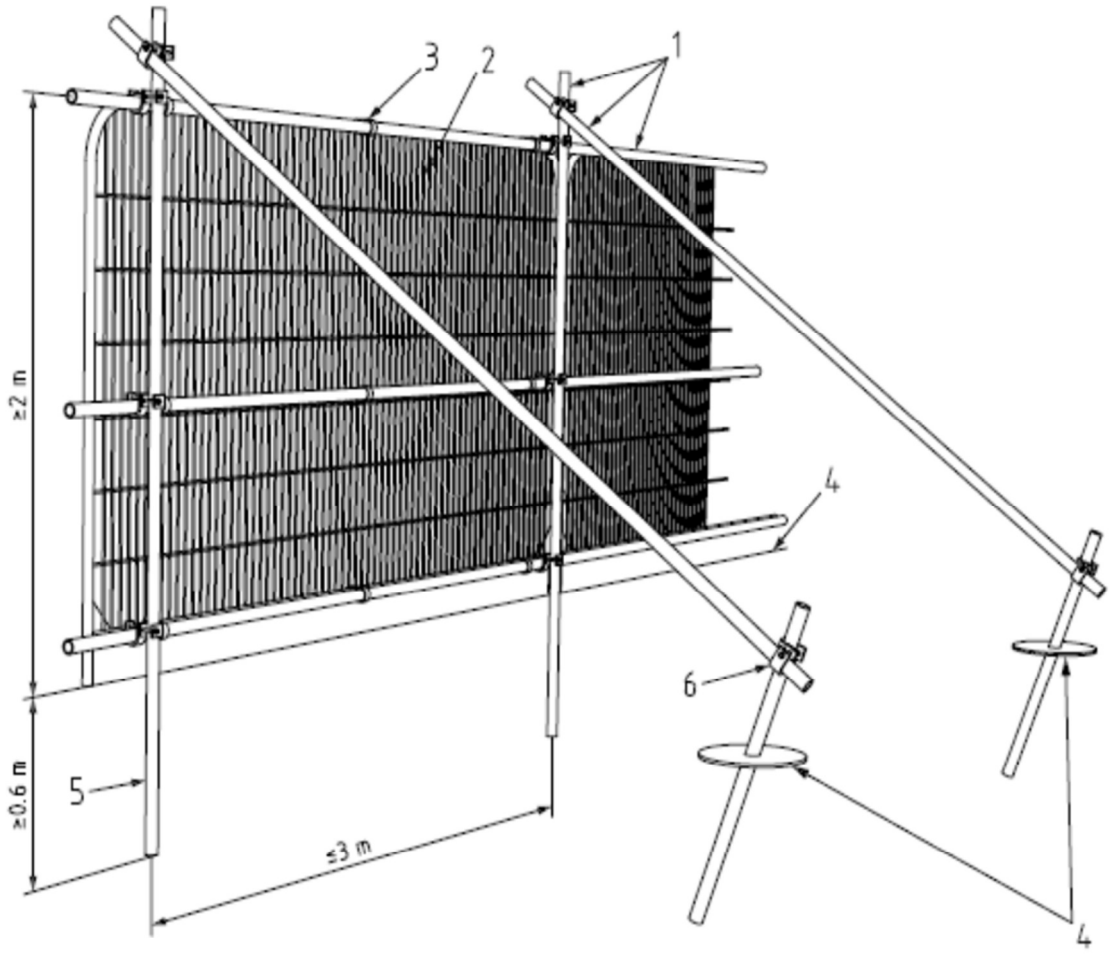

Key

1 Standard scaffold poles
2 Heavy gauge 2 m tall galvanized tube and welded mesh infill panels
3 Panels secured to uprights and cross-members with wire ties
4 Ground level
5 Uprights driven into the ground until secure (minimum depth 0.6 m)
6 Standard scaffold clamps

E.2 Extract from BS5837:2012: Examples of Above Ground Stabilising System

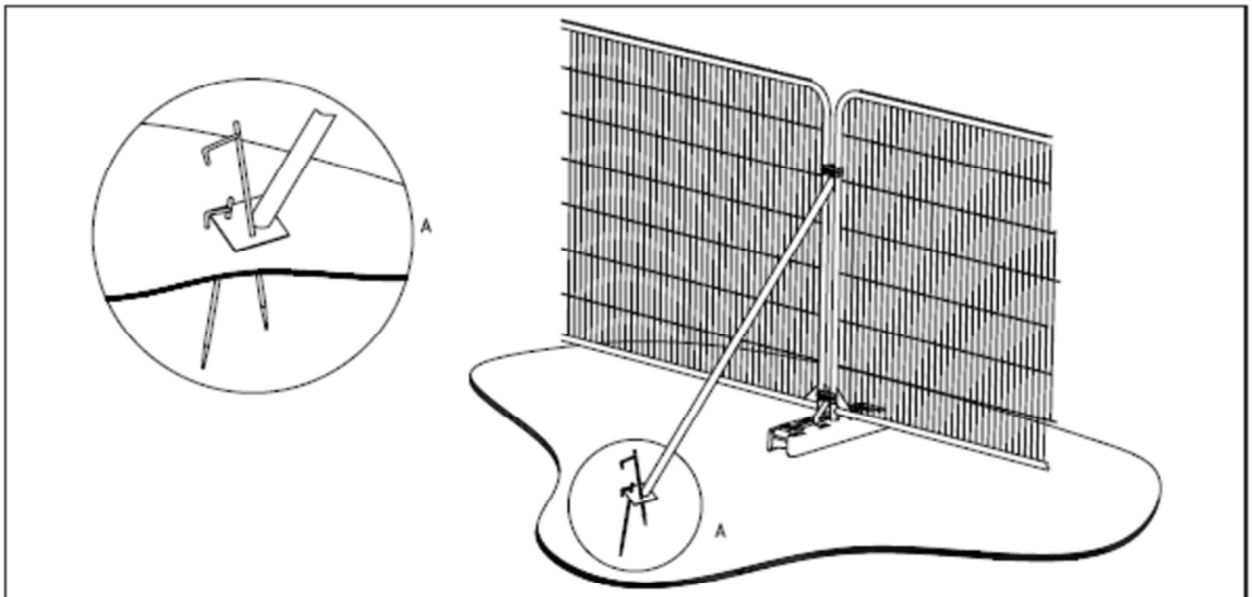

a) Stabilizer strut with base plate secured with ground pins

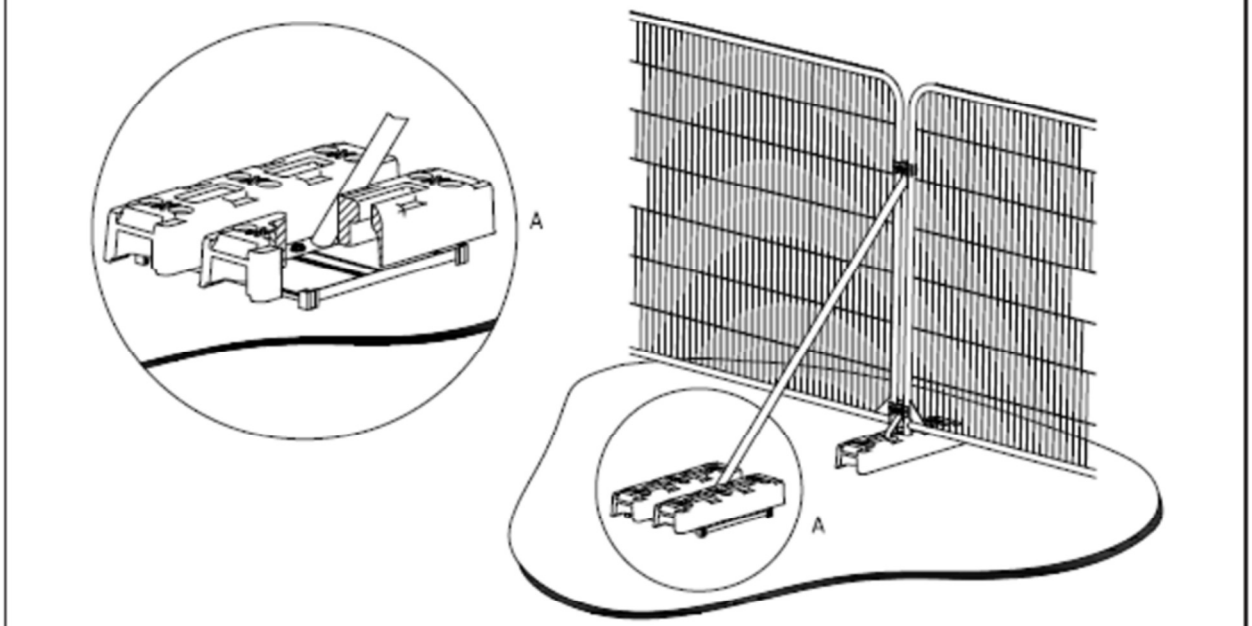

b) Stabilizer strut mounted on block tray

E.3 Extract from BS5837:2012 Ground Protection during Demolition and Construction

6.2.3.2 Where the set-back of the tree protection barrier would expose unmade ground to construction damage, new temporary ground protection should be installed as part of the implementation of physical tree protection measures prior to work starting on site.

6.2.3.3 New temporary ground protection should be capable of supporting any traffic entering or using the site without being distorted or causing compaction of underlying soil.

NOTE The ground protection might comprise one of the following:

a) for pedestrian movements only, a single thickness of scaffold boards placed either on top of a driven scaffold frame, so as to form a suspended walkway, or on top of a compression-resistant layer (e.g. 100 mm depth of woodchip), laid onto a geotextile membrane;

b) for pedestrian-operated plant up to a gross weight of 2 t, proprietary, inter-linked ground protection boards placed on top of a compression-resistant layer (e.g. 150 mm depth of woodchip), laid onto a geotextile membrane;

c) for wheeled or tracked construction traffic exceeding 2 t gross weight, an alternative system (e.g. proprietary systems or pre-cast reinforced concrete slabs) to an engineering specification designed in conjunction with arboricultural advice, to accommodate the likely loading to which it will be subjected.

6.2.3.4 The locations of and design for temporary ground protection should be shown on the tree protection plan and detailed within the arboricultural method statement (see **6.1**).

6.2.3.5 In all cases, the objective should be to avoid compaction of the soil, which can arise from the single passage of a heavy vehicle, especially in wet conditions, so that tree root functions remain unimpaired.

Appendix F. Glossary

Adventitious Bud	Adventitious buds develop from places other than a shoot at the tip of a stem e.g. along a branch, often formed as a result of stress e.g. after the stem is wounded or pruned.
AGL (Above Ground Level)	Terminology (prefixed by a measurement) stated within the Tree Survey Schedule to reference the location/height of a particular tree feature or tree part
Co-dominant stem	A stem that has grown in direct competition to the main stem and which has formed a substantial size influencing the appearance of the tree
Crown Lift	The removal of the lowest branches, usually to a specified height. It can be used to allow more residual light and greater clearance underneath the canopy for vehicles etc.
Dieback	Where branches are beginning to show signs of death usually at the tips of the crown
Epicormic growth	Small branches that grow in uncharacteristic clusters around the base of a tree, usually as a result of bad pruning or other stress factor
Etiolated	Tall, thin tree which has extended vertically without substantial lateral development. Usually as a result of competition for light from other species
'Hung up' branch	A branch which has become detached from the tree but is prevented from falling to the ground by the presence of other branches within the crown
Included bark	Where the bark on two adjoining branches or stems is growing tight together, forming a joint with limited physical strength
ms	A multi-stemmed tree
Pollarding	A method of tree management in which the main trunk of the tree is cut at a particular height, and the resulting branches are then cropped on a regular basis
Occluded Wound	The overgrowth of a wound with (callus) tissue produced subsequently.
RPA (Root Protection Area)	The theoretical rooting area of a tree defined by BS5837:2005 Trees in Relation to Construction - Recommendations
Stag -headed	Describes the silhouette of a large tree whose crown has died back so that the ends of the dead branches protrude like spikes or antlers from the reduced live foliated crown.
Topping	Topping is a form of pruning that removes terminal growth leaving a 'stub' cut end. Topping causes serious health problems to a tree

Appendix G. References

British Standard BS 5837:2012 Trees in Relation to design, demolition and construction – Recommendations; April 2012; ISBN 978 0 580 69917 7

British Standard BS 3998:2010 Recommendations for Tree Work; Third (present) edition, December 2010; ISBN 978 0 580 53777 6

The National Joint Utilities Group, Issue 1 – 8th October 2007, Volume 4 - Guidelines for the Planning, Installation and Maintenance of Utility Apparatus in Proximity to Trees

Arboricultural Association, 1991, Leaflet 4 - Tree Management