09/01051/ 27 OCT 2009 - SMD

68 67

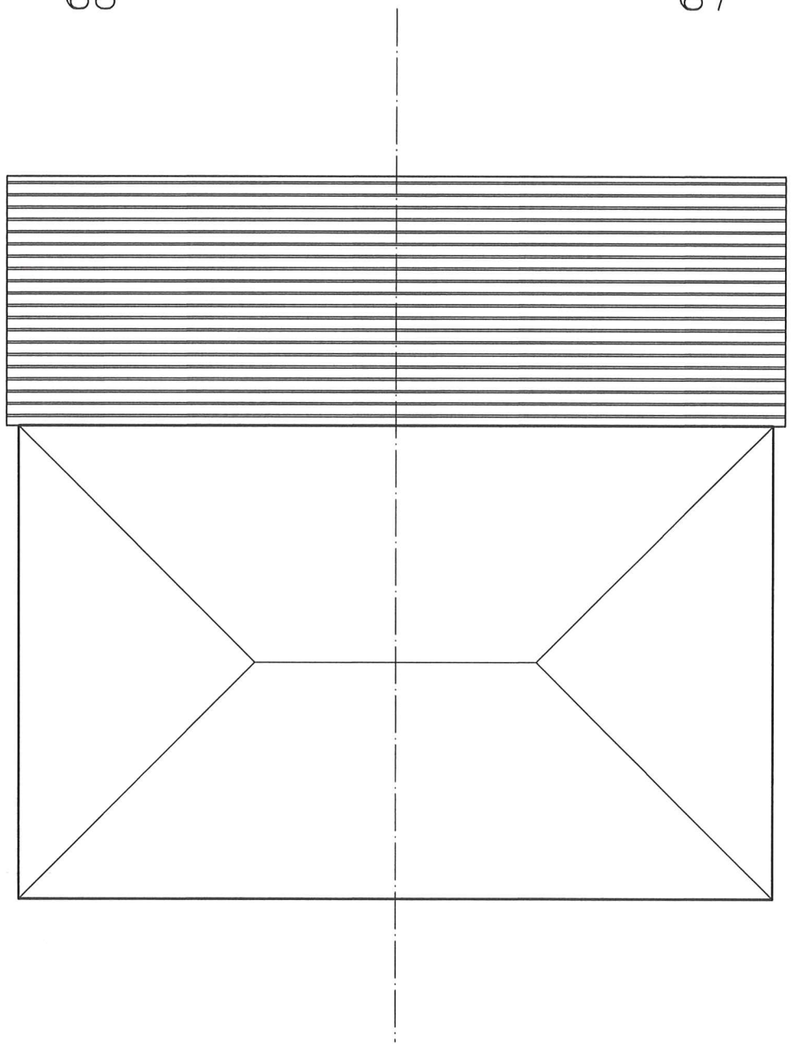

Revision	
	Date

Project.
Roof Plan

Client.
67-68 The Uplands
Biddulph

DLH design associates
62 Ennerdale Drive - Congleton - Cheshire CW12 4FL
Tel/Fax: 01260 279234 - Email: dmhill@freenet.co.uk

Date. 10 09	Scale. 1:100
Drawn. dh	Drg. No. 09 1021 6

Note:-

Figured dimensions to be followed in preference to scaled. All dimensions to be checked on site, in the eventof any discrepancy refer to the Architect. This drawing remains the copyright of DLH design associates and may not bo copied in whole or part without prior written consent.