RevNo	Revision note	Date	Signature	Checked



SIDE VIEW EXISTING

FRONT VIEW EXISTING

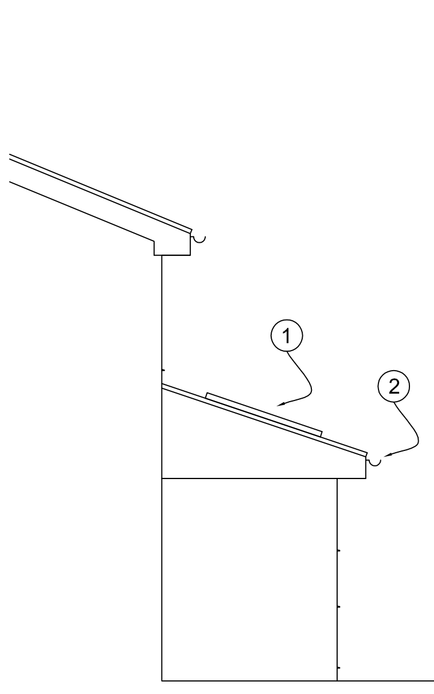

SIDE VIEW PROPOSED



FRONT VIEW PROPOSED

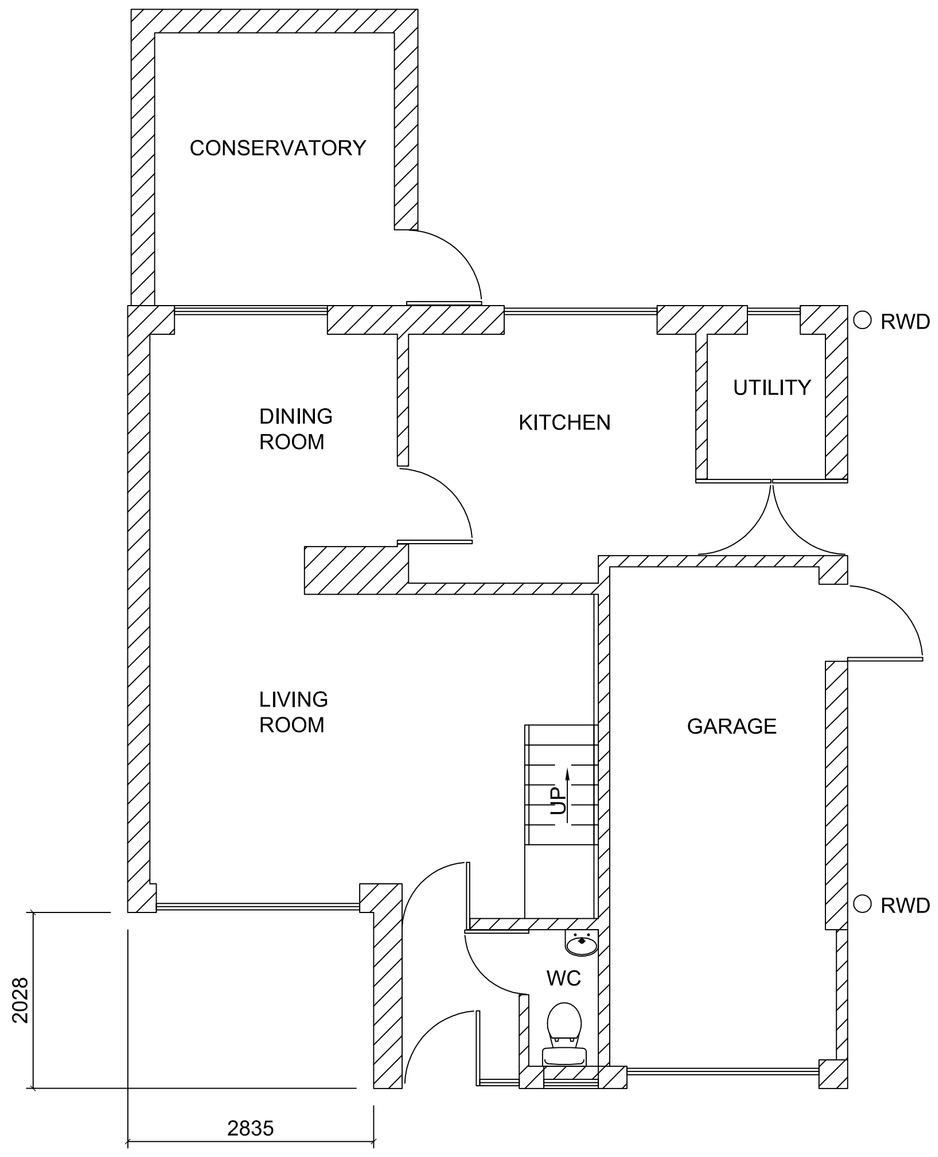

EXISTING FLOOR PLAN
GROUND FLOOR

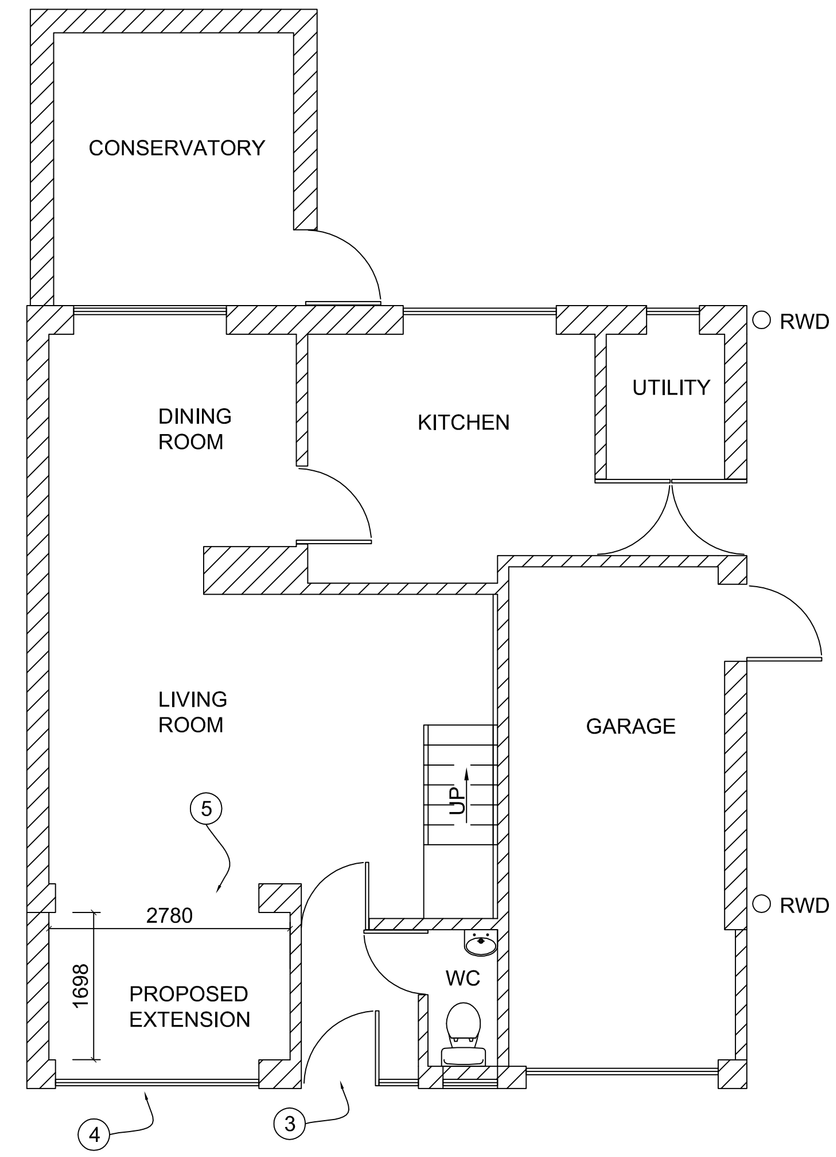

PROPOSED FLOOR PLAN
GROUND FLOOR

RWD DENOTES RAIN WATER DRAIN

1 DENOTES 2 N° VELUX WINDOWS 780 x 1400mm CENTRAL HINGED

2 DENOTES GUTTER EXTENDED AND TO RUN INTO EXISTING DRAIN POINT

3 DENOTES EXISTING DOOR TO BE REUSED

4 DENOTES NEW WINDOW FENSA APPROVED

5 DENOTES EXISTING LINTEL TO BE CHECKED AND REPLACED IF REQUIRED

0 0.5 1 2 3 4

SCALE 1:50

Itemref	Quantity	Title/Name, designation, material, dimension etc			Article No./Reference
Designed by PH		Checked by PH	Approved by - date PH 15-2-17	Filename SMD-2017-0087	Date 15-02-2017	Scale 1:50
PH		LDC SUPPORTING DRAWING			
		2017-0087-001		Edition 0	Sheet 1/1