NOTE:

All works to be carried out in accordance with relevant British and European Standards and Codes of Practice. All construction products to bear CE mark and be used in accordance with manufacturer's recommendations and applicable BBA certificates. Any conflicts to be notified to architect at earliest opportunity.

This drawing to be read in conjunction with all relevant Architect's and other Specialist's drawings, details and specifications.

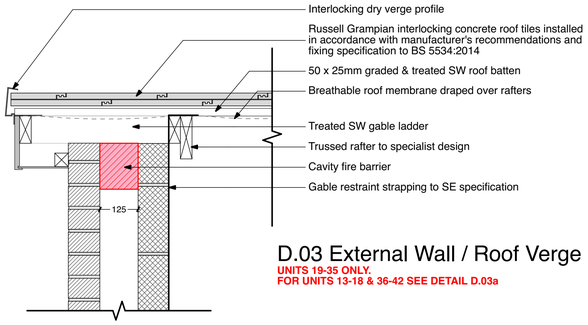

D.03 External Wall / Roof Verge

UNITS 19-35 ONLY.
FOR UNITS 13-18 & 36-42 SEE DETAIL D.03a

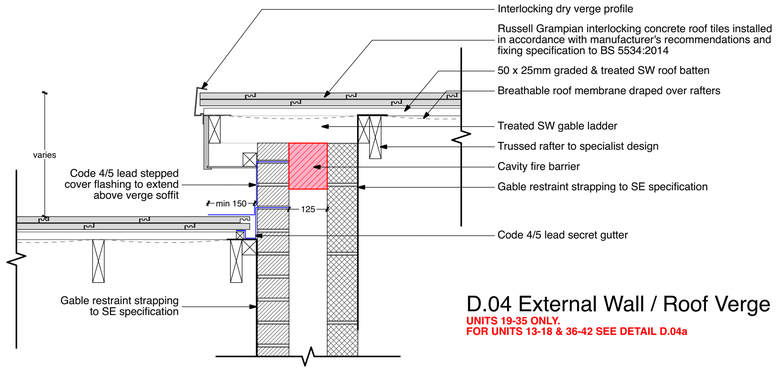

D.04 External Wall / Roof Verge

UNITS 19-35 ONLY.
FOR UNITS 13-18 & 36-42 SEE DETAIL D.04a

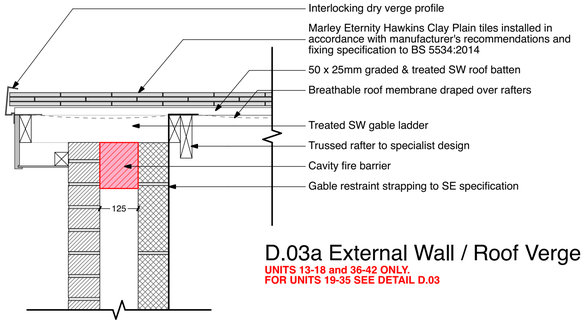

D.03a External Wall / Roof Verge

UNITS 13-18 and 36-42 ONLY.
FOR UNITS 19-35 SEE DETAIL D.03

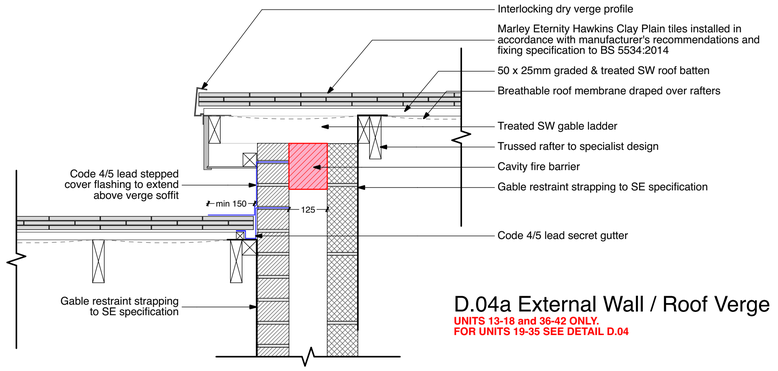

D.04a External Wall / Roof Verge

UNITS 13-18 and 36-42 ONLY.
FOR UNITS 19-35 SEE DETAIL D.04

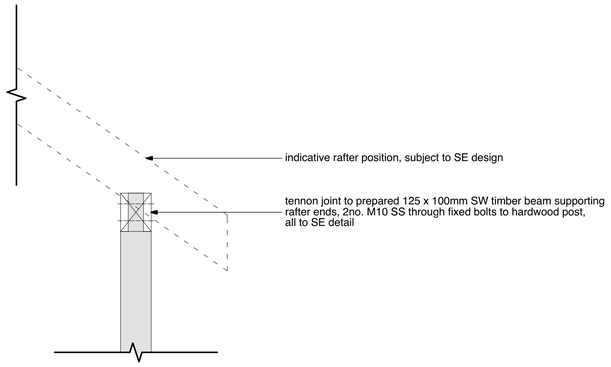

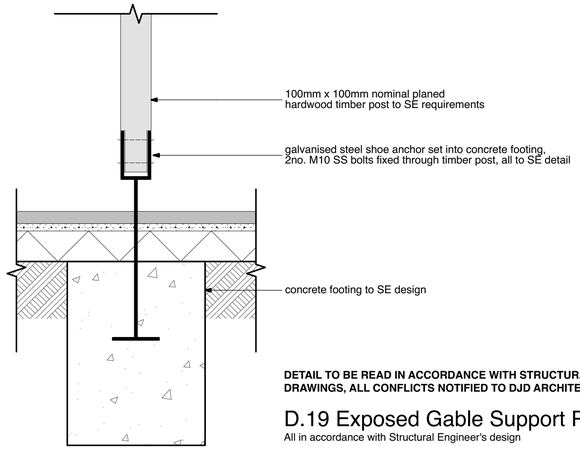

DETAIL TO BE READ IN ACCORDANCE WITH STRUCTURAL ENGINEER'S DRAWINGS, ALL CONFLICTS NOTIFIED TO DJD ARCHITECTS WITHOUT DELAY

D.19 Exposed Gable Support Post

All in accordance with Structural Engineer's design

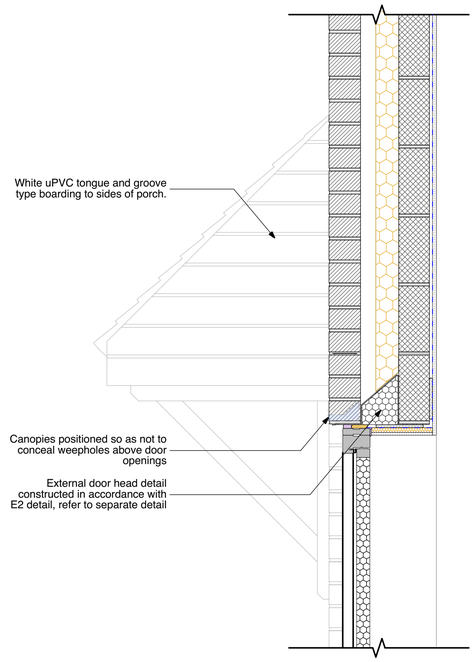

D.01 Pitched Canopy

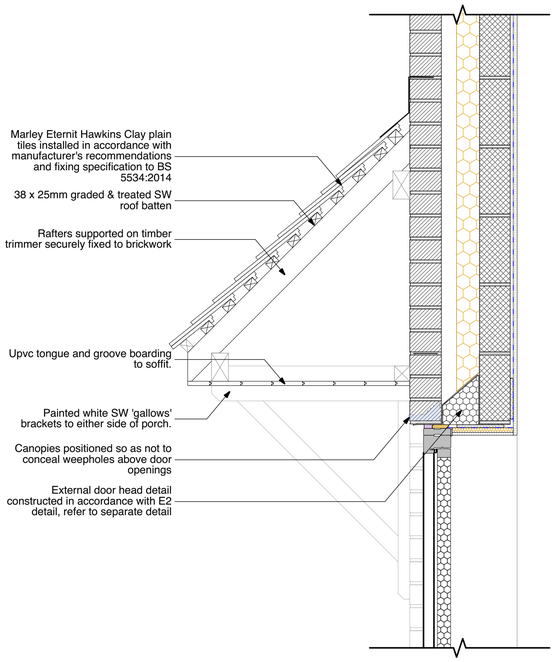

D.01a Pitched Canopy

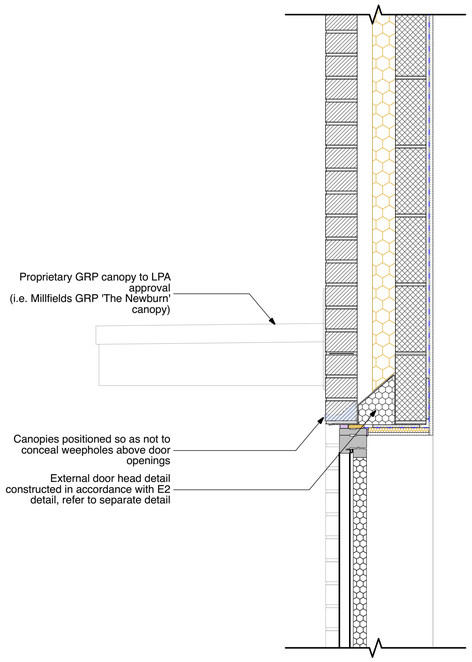

D.02 Flat Proprietary GRP Canopy

DJD Architects

2 St Oswald's Road
Worcester WR1 1HZ

t: 01905 612864
f: 01905 610011

mail@djdgroup.co.uk
www.djdgroup.co.uk/architects/

DO NOT SCALE. DIMENSIONS TO BE CHECKED ON SITE. THIS DRAWING IS COPYRIGHT AND MAY NOT BE REPRODUCED WITHOUT WRITTEN CONSENT.

Revisions			
B	19.12.2016	Roof and porch details updated	RKP
A	05.10.2016	Text updated	RKP

0 10 20 30 40 50 60 70 80 90 100

When reproduced correctly at 1:1 this scale should be accurate in millimetres

Significant risks are not necessarily those that involve the greatest risks, but those, including health risks that are:
a) not likely to be obvious to a competent contractor or other designers;
b) unusual; or
c) likely to be difficult to manage effectively.

Significant Health and Safety Risks:

- Amber 1 Ground Gas Contamination, ensure appropriate PPE is used on site and hand wash facilities are available.

Client	**The Wrekin Housing Trust**
Project	**Bank Street, Cheadle**
Drawing Title	**Construction Details**
Drawing Format	**A1**
Drawn:	**MJA** 13.05.2016
Drawing Status	**BUILDING REGS**
Drawing Scale	**1:10**
Checked:	
pdf / plt / dwg	
Approved For Issue:	
Drawing Number and Revision:	**2015/K787/252(B)**