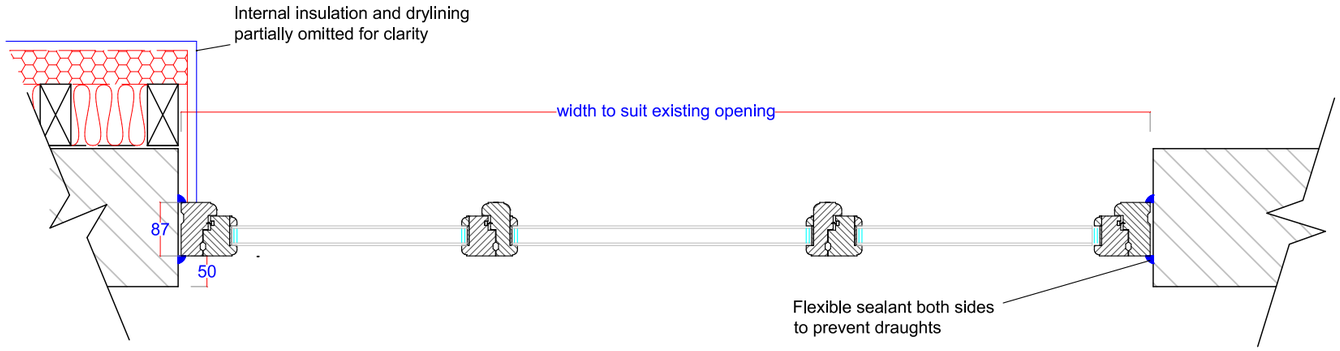

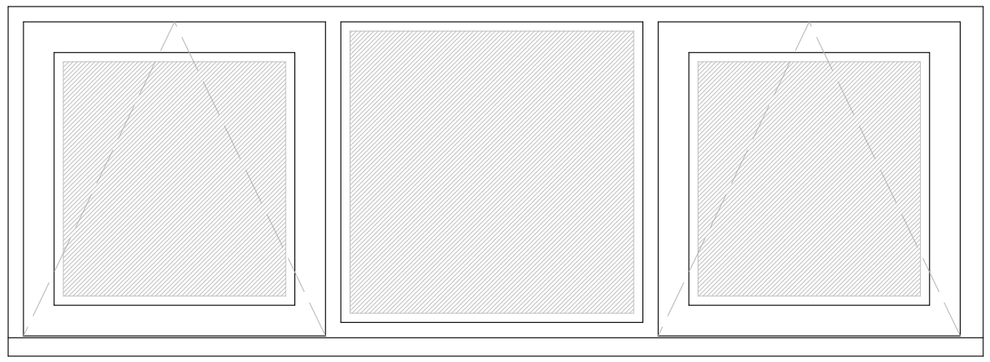

Win: 1

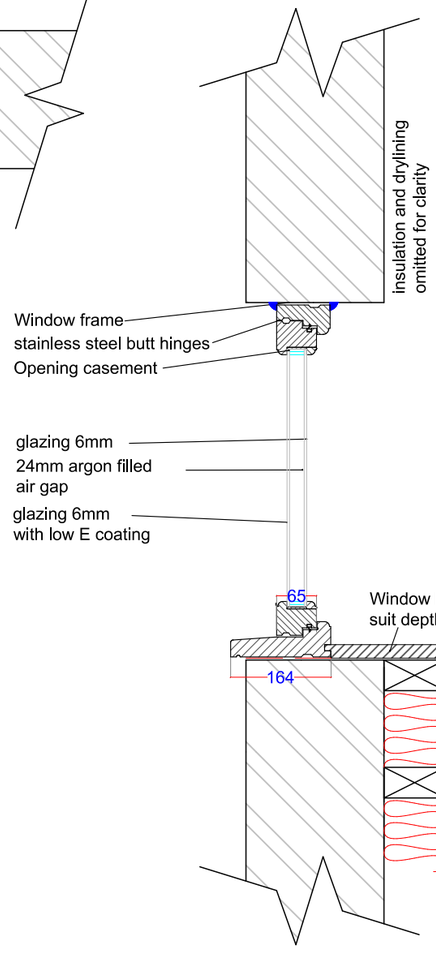

Typical section

DBD Architectural Consultancy ©2016

1. Copyright is vested with DBD Architectural Consultancy.

2. All dimensions to be checked on site before proceeding.

3. Contractor to check/adjust dimensions of new work to suit existing conditions.
Do not assume existing structure or details are plumb, square or level.

4. Contractor must notify the architect of any discrepancies before proceeding.

5. All drawings to be read in conjunction with all other consultants drawings and specs.

Rev	Date	Description

DBD Architectural Consultancy

DBD Architectural Consultancy Ltd
50 Brcad Street, Leek,
Staffo·dshire, ST13 5NS
01538 383118
mail@dbdconsultants.co.uk
www.dbdconsultants.co.uk

Client
Mrs A Wagstaff
Creswell Ford Farm
Dilhorne road
Stoke on trent
ST10 2PH

Project
Proposed conversion of redundent agricultural barns

Title
Casement window details
Sheet 1

Stage: Planning		
Size: A3	Date: 27.10.16	Job No: 1564-100
Scale: 1-10		
Drawing Number: PL 26		