CANAL & RIVER TRUST ©

Notes:

- All dimensions shown in millimetres unless otherwise stated.

NOTE: Paddle rod to be centred under ground paddle rack.

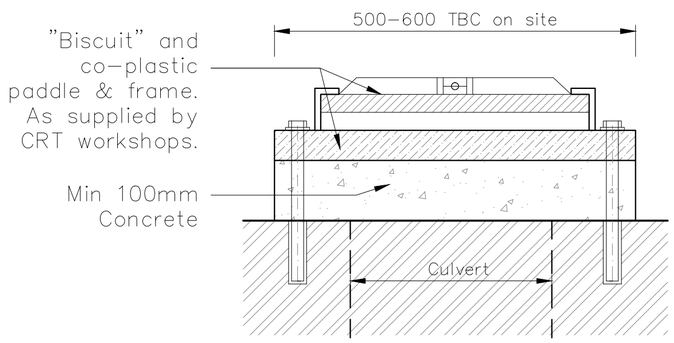

PLAN @ 1:10

PROPOSED PADDLE REPLACEMENT

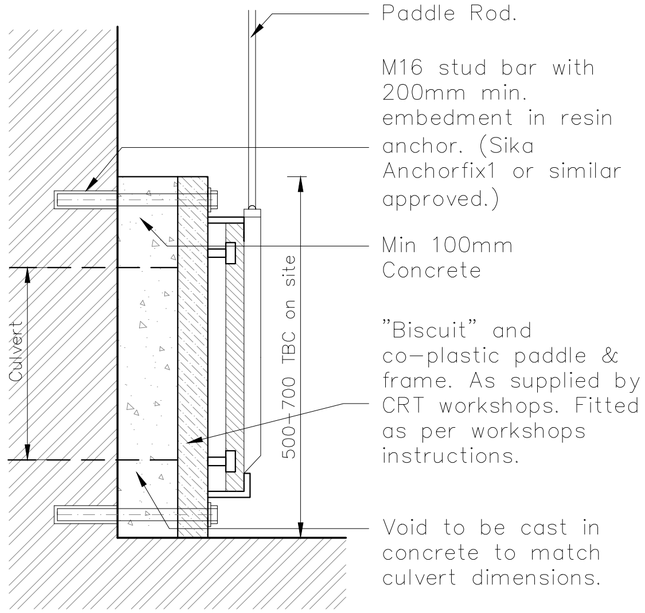

SIDE ELEVATION @ 1:10

NOTE: This drawing is to read alongside Specification document

Residual Risks of Design.

- Working at height
- Working in, near & above water.
- Working with handtools.
- Manual handling.
- Confined space.
- Working with cement mortar, lime mortar & concrete.

REVISIONS

LOCATION: HAZELHURST MIDDLE, LOCK 11
CALDON CANAL
FUNC. LOC. - CL-016-004

TITLE: PADDLE REPLACEMENT DETAIL

Canal & River Trust
Works Development Team
Fazeley - Gloucester - Hatton

DRAWN BY: M. Grieve	DESIGNED BY: P. White
CHECKED BY: P. White	APPROVED BY: R. Wylie
DATE: 28.09.2016	SCALE: 1:10
ORIGINAL SIZE: A3	REVISION: -
DRG. No.: WDT-084	