Fig 1.

Example of Tree Protection Warning Sign.



Fig 2.

Protective Barrier

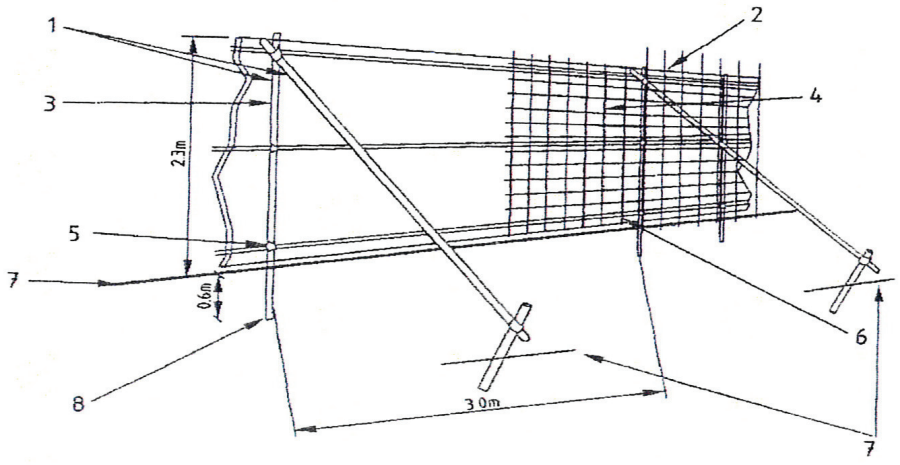

1. Standard scaffold poles
2. Uprights to be driven into the ground
3. Panels secured to uprights with wire ties and where necessary standard scaffold clamps.
4. Weldmesh wired to the uprights and horizontals
5. Standard clamps
6. Wire twisted and secured on inside face of fencing to avoid easy dismantling.
7. Ground level
8. Approx 0.6m driven into the ground