This drawing is copyright and should not be reproduced without permission.
The contractor is responsible for checking dimensions and levels and drainage inverts prior to commencing works - any discrepancy to be verified before proceeding..figured dimensions only to be worked to: DO NOT SCALE.
All work to be carried out in accordance with the current Building Regulations, British Standards/Codes of practice and statutory authority bye -laws and recommendations.

Revision	Comments	Date

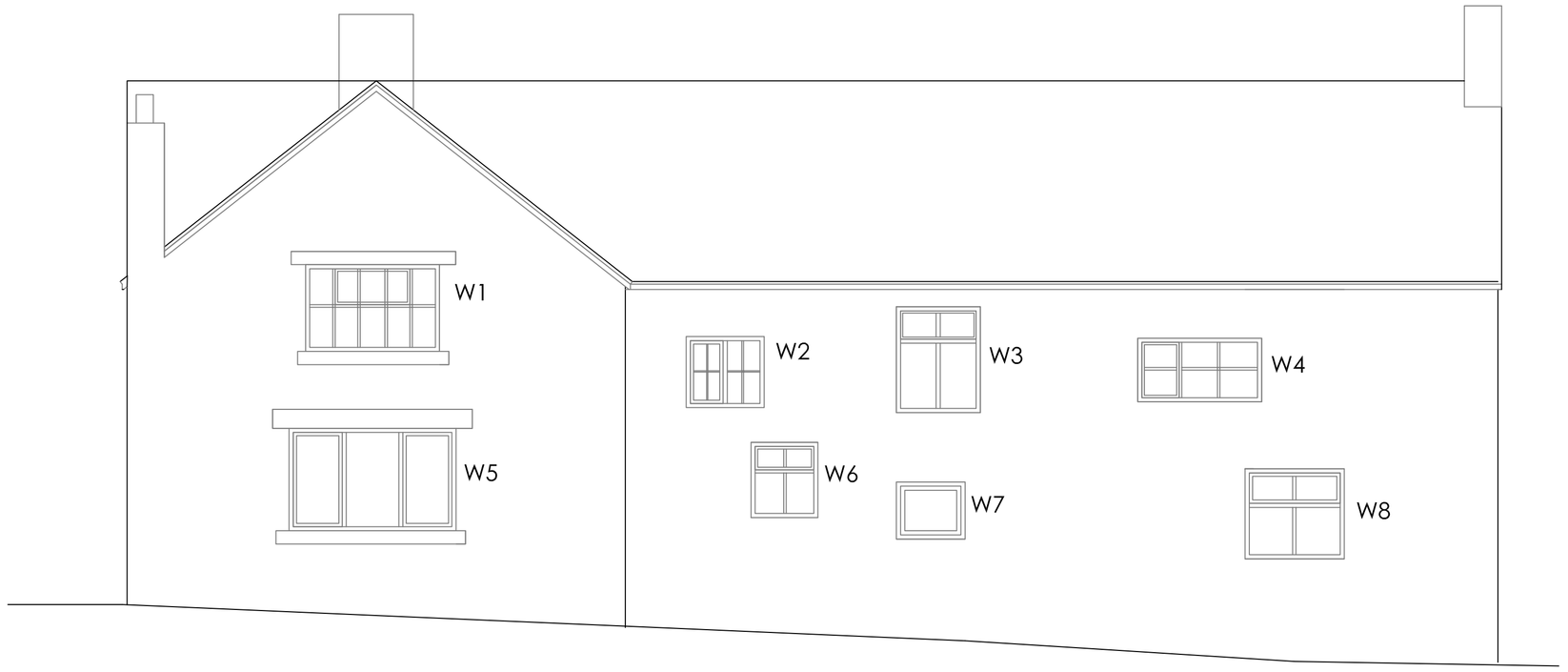

Existing South Elevation



site plan 1:500

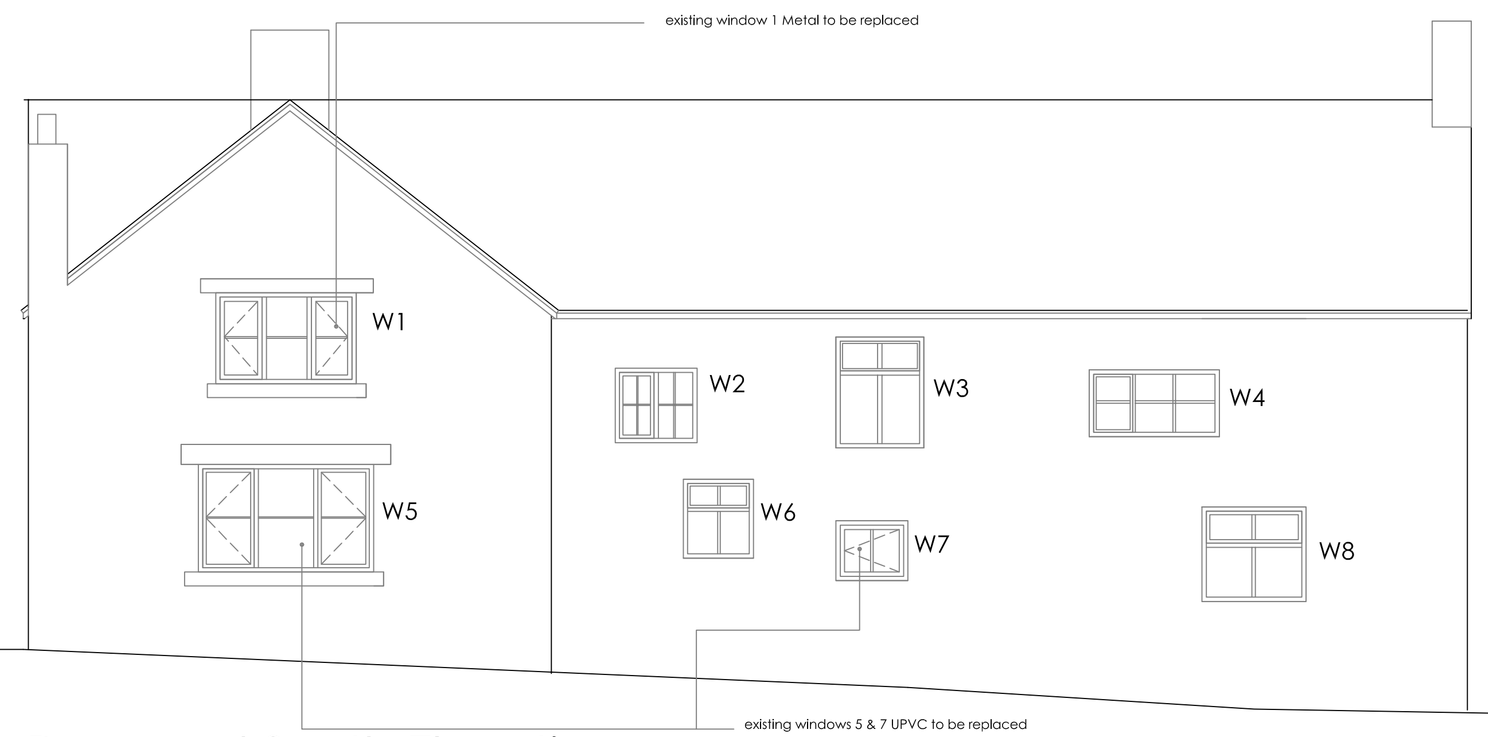

Proposed South Elevation

new windows to be timber with flush fitting casements to receive white painted finish

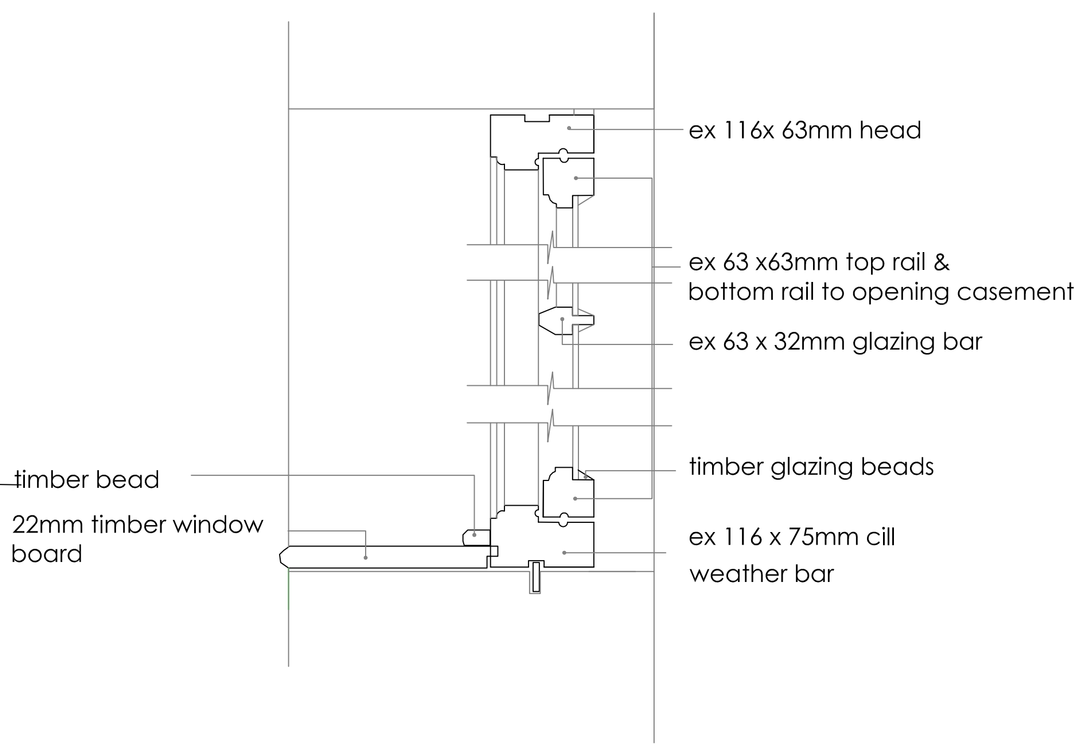

section through new windows 1:5

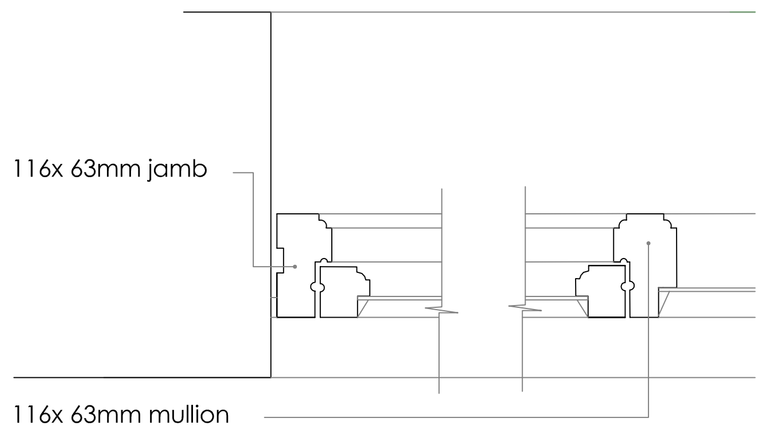

plan through new windows 1:5

Robert Berry MCIAT
Architectural services
10 Truro Close, Congleton, Cheshire, CW12 3BD
t : 01260 279098 m : 07790 179093 e: robert.berry10@yahoo.co.uk

Client
Mr & Mrs D Lockitt.

Project
Proposed replacement windows at Hall House Farm, Askerbank Lane, Rushton Spencer, SK11 0QU

Title
Scheme layout plan

Scale @A1 1:50
Date Aug 2016
Drg no 1634 /02 Rev