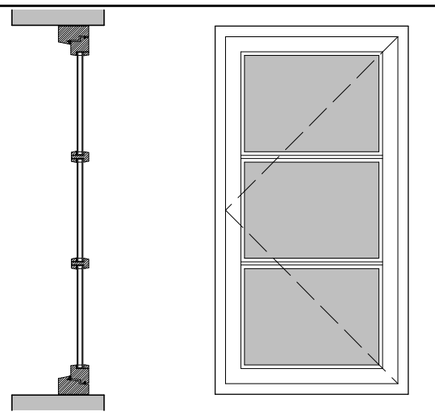

Section

Elevation



Plan



Section

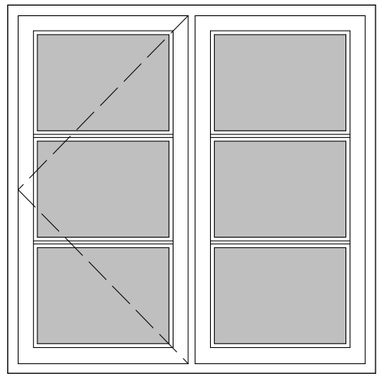

Elevation

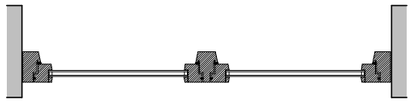

Plan



Section

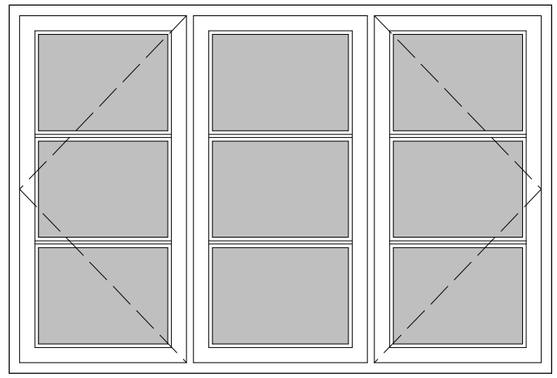

Elevation



Plan

NOTE: All windows are typical examples only. For exact window sizes each opening must be measured on site prior to installation.

All windows to be flush fitting traditional casements with a paint finish.

Typical Window Openings
With Flush Fitting Casements

Scale 1:20

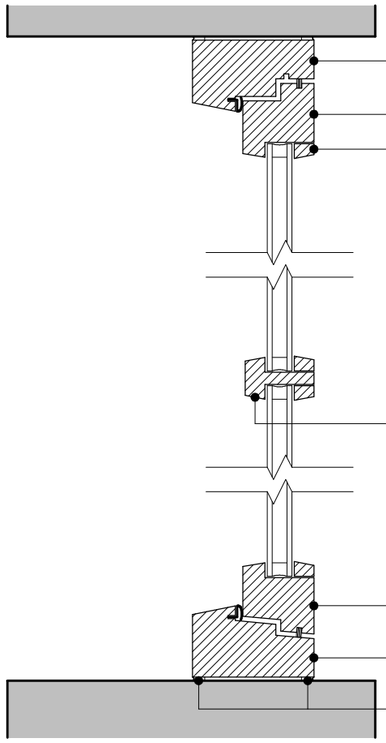

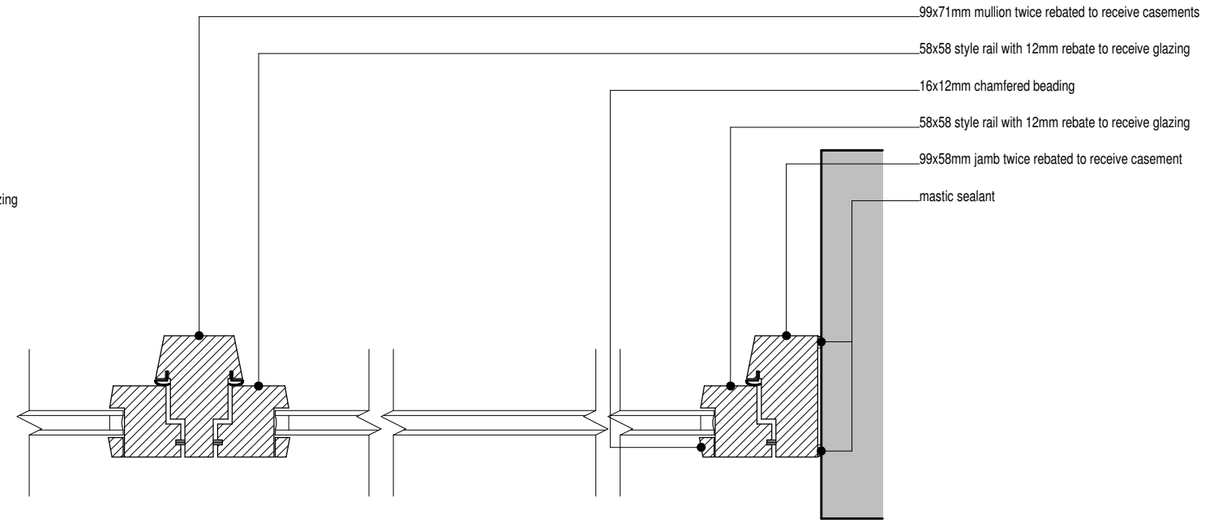

Typical Flush Fitting Casement
Plan And Section Detail

Scale 1:5

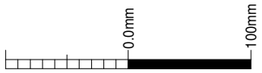

scale bar @ 1:5

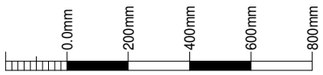

scale bar @ 1:20

Mr & Mrs A. Collins

PROPOSED REPLACEMENT WINDOWS
TO NEWHALL FARMHOUSE,
HAZLES CROSS ROAD, KINGSLEY,
STAFFORDSHIRE MOORLANDS,
ST10 2AY.

WINDOW DETAILS

Date	Sheet	Scale
OCTOBER 2009	A3	1:5, 1:20
Drg No.	Rev.	Drawn
2009-1641-16	-	AB
Rev.		

SAMMONS Architectural LIMITED
Chartered Institute of Architectural Technologists

10 Cawdry Buildings, Fountain Street, Leek. ST13 6JP
Telephone + Fax 01538 386002
E-mail: info@sammonsltd.co.uk

This drawing is copyright. Do not scale.
All dimensions must be checked prior to commencement.