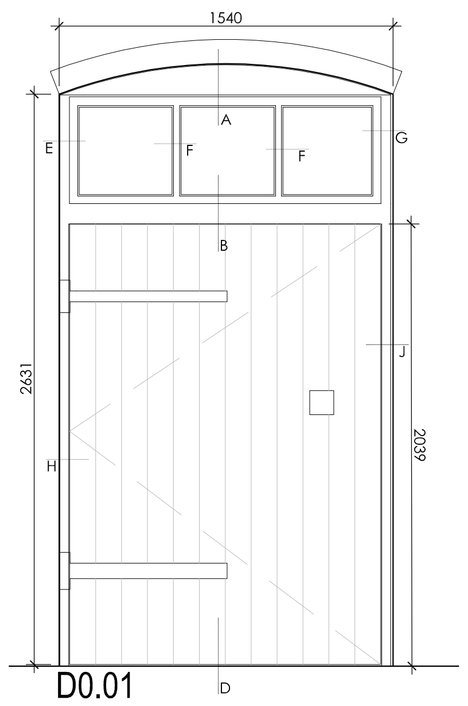

D0.01

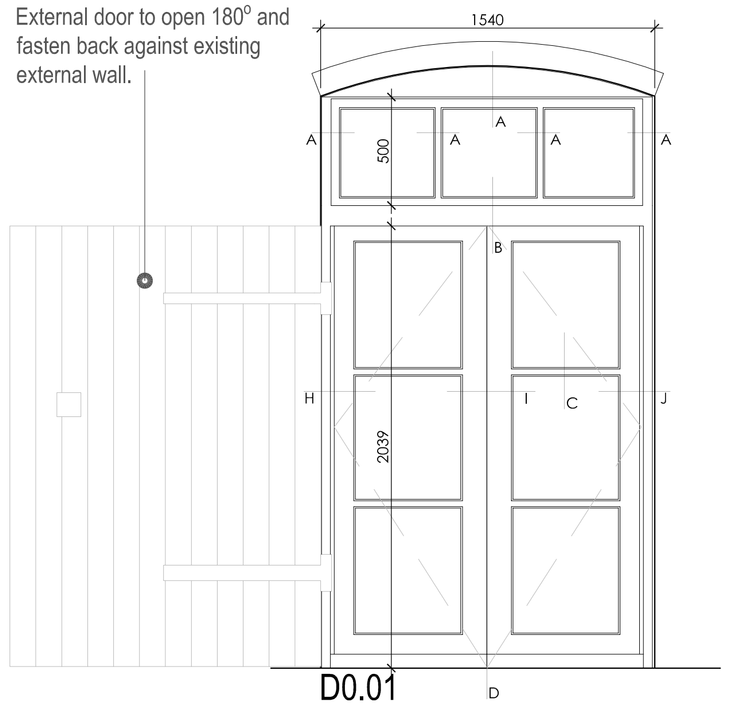

D0.01

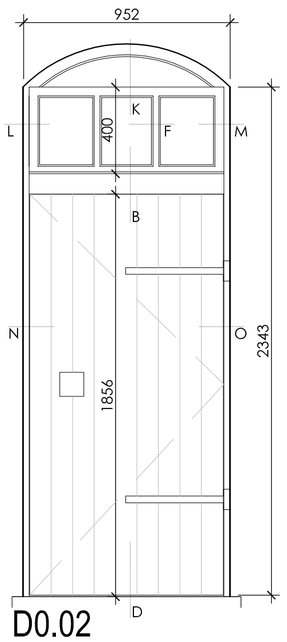

D0.02

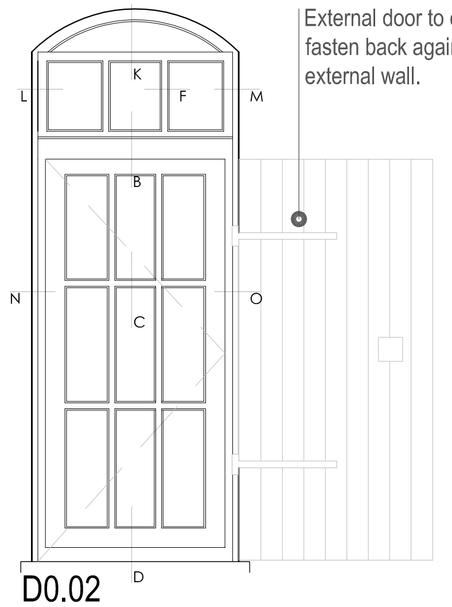

D0.02

ELEVATIONS 1:20

This drawing to be read in conjuction with drawing:
00479 - AL[0]02

GENERAL NOTES

- All new timber windows to be stained hardwood finish to match existing windows.
- Opening windows to provide means of ventilation. See details provided.

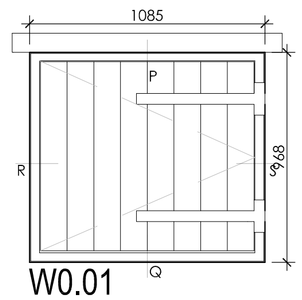

W0.01

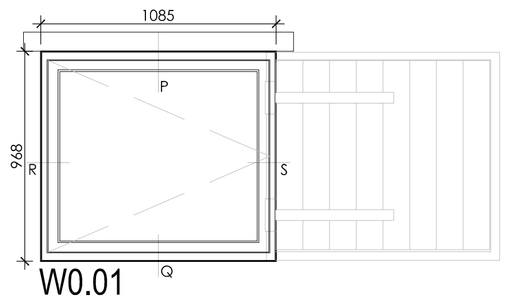

W0.01

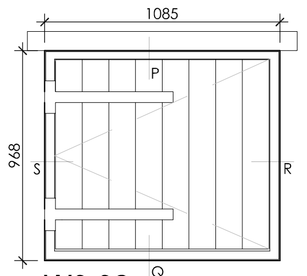

W0.02
W0.03

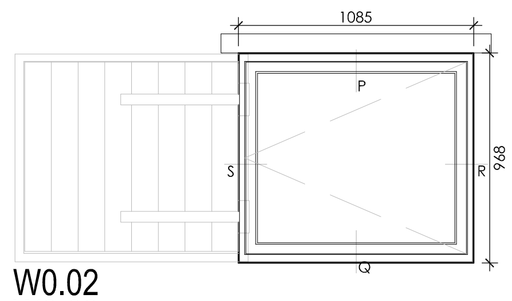

W0.02
W0.03

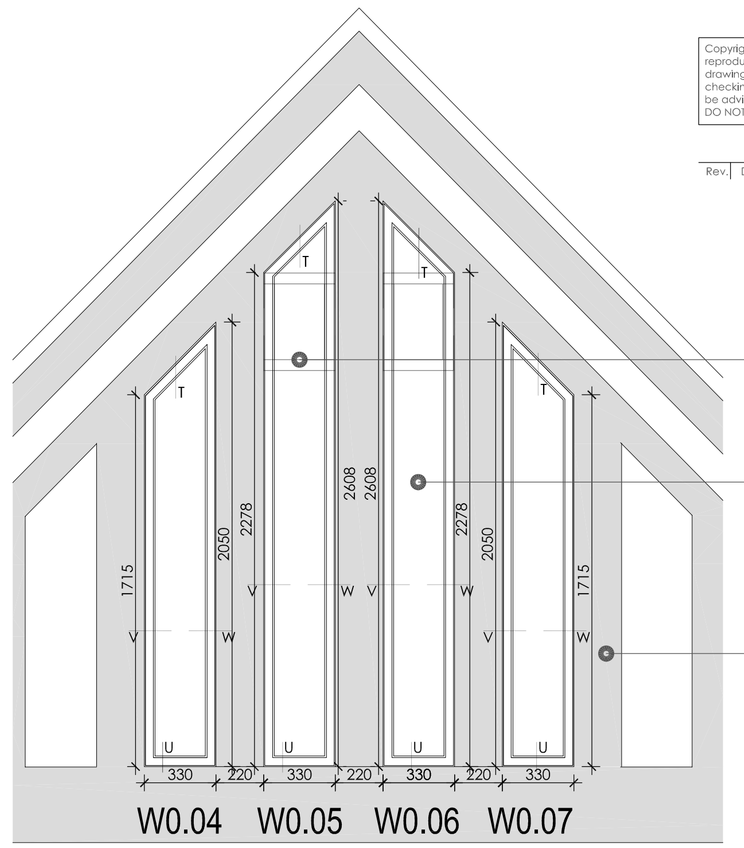

W0.04 W0.05 W0.06 W0.07

DETAIL A

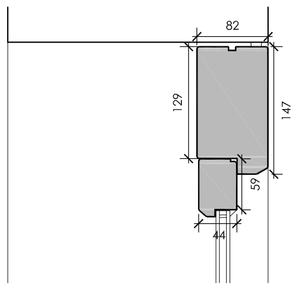

DETAIL K

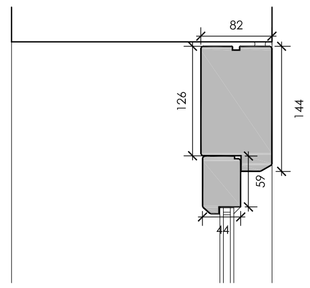

DETAIL E

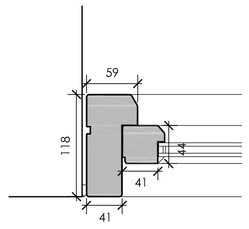

DETAIL F

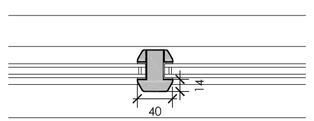

DETAIL G

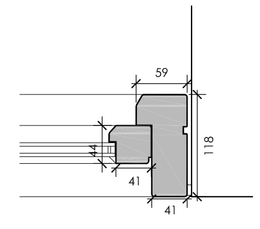

DETAIL B

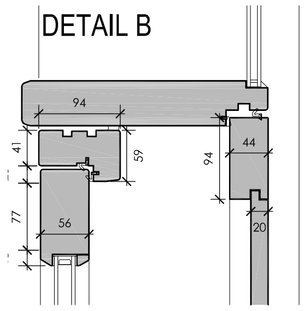

DETAIL L

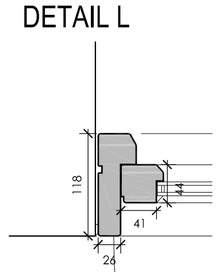

DETAIL M

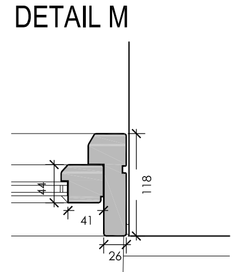

DETAIL H

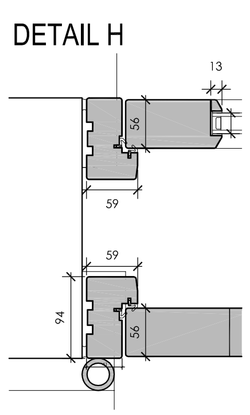

DETAIL I

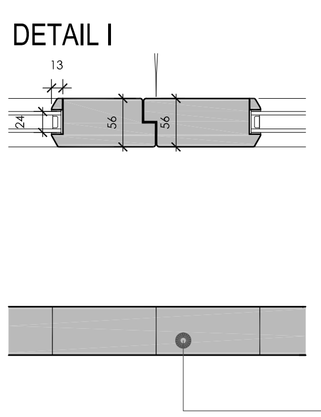

DETAIL J

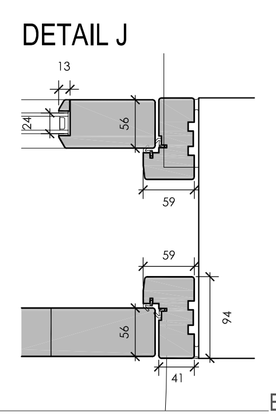

DETAIL C

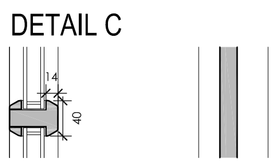

DETAIL N

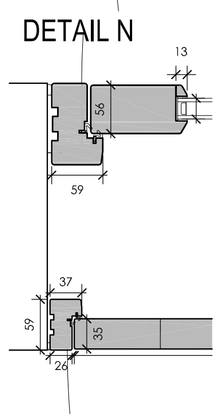

DETAIL O

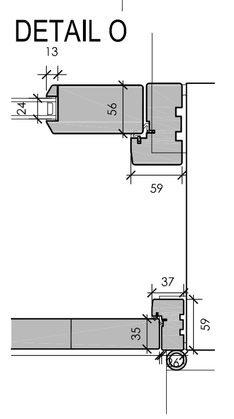

DETAIL D

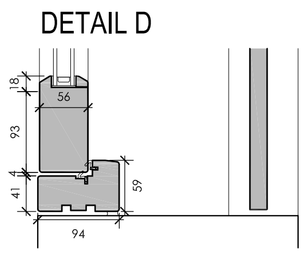

DETAIL P

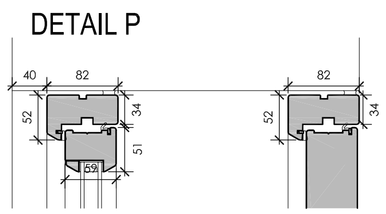

DETAIL Q

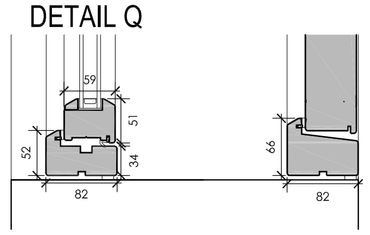

DETAIL R

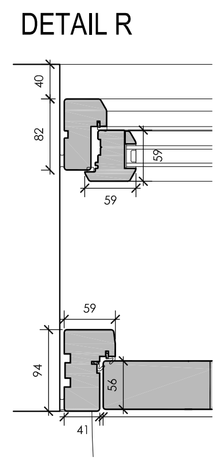

DETAIL S

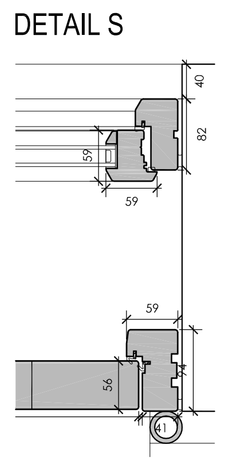

DETAIL T

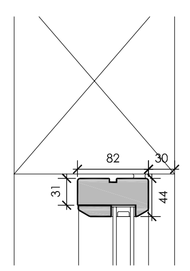

DETAIL V

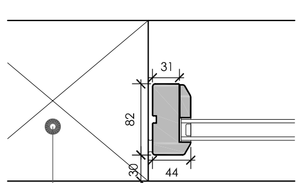

Existing timber framed gable.

DETAIL U

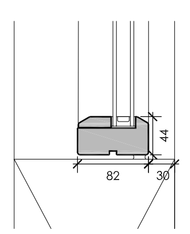

DETAIL W

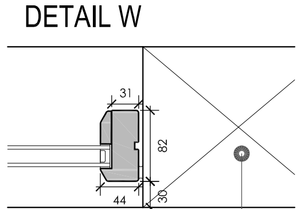

Existing timber framed gable.

SECTIONS 1:5

External door to open 180° and fasten back against existing external wall.

Copyright of this drawing is vested in the Architect and it must not be copied or reproduced without consent. Figured dimensions only are to be taken from this drawing. All contractors must visit the site and be responsible for taking and checking all dimensions relative to their work. Hewitt&Carr Architects Ltd are to be advised of any variation between drawings and site conditions.
DO NOT SCALE OFF THIS DRAWING.....IF IN DOUBT ASK

Rev.	Drawn	Comments	Date

Hewitt&Carr Architects
A: 2-4 Cross Street I Cheadle I Staffordshire I ST10 1NP
T: 01538 756888
E: enquiries@hcarchitects.co.uk
W: www.hcarchitects.co.uk

Client
Mr and Mrs Booth

Project
The Keys, Caverswall Castle,
Blythe Bridge Road, ST11 9EA

Title
Window Details
Condition 3

Status
Planning

Date Jun 2016
Scale @A1 As Stated
Drawn AS
Checked

Project No 00479
Drawing No. AL(0)03
Rev

PLANNING