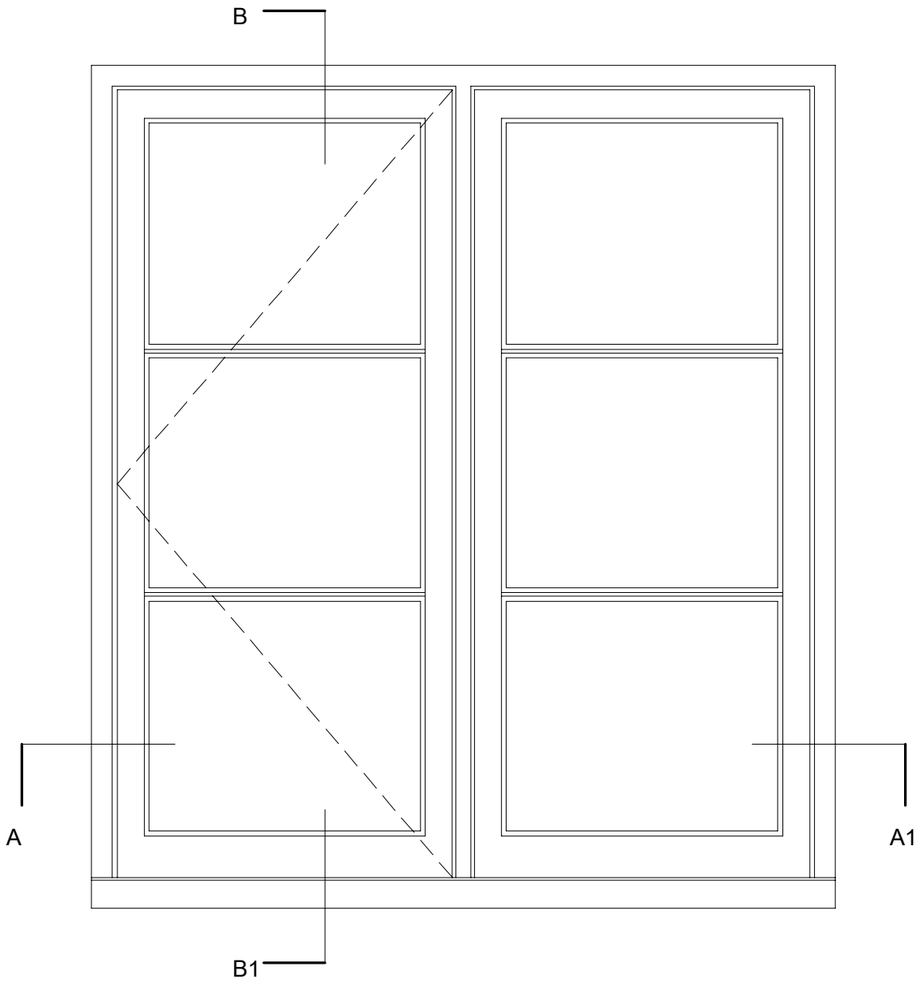

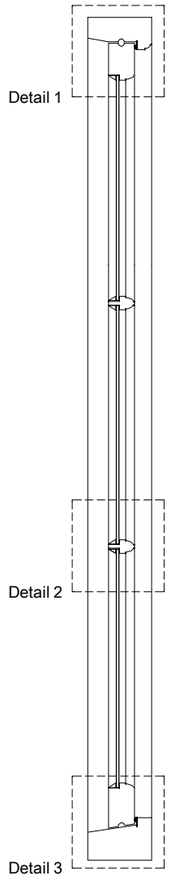

Section B-B1

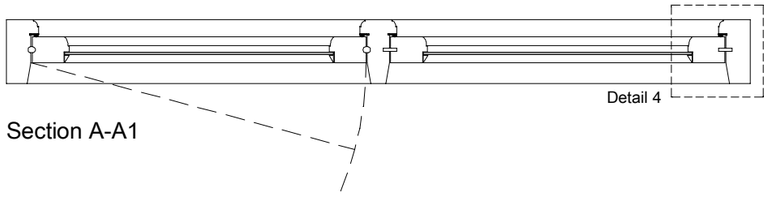

Section A-A1

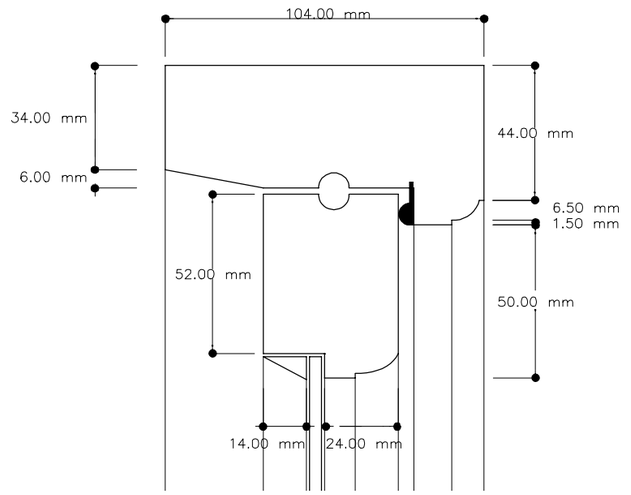

Detail 1 - Scale 1:2

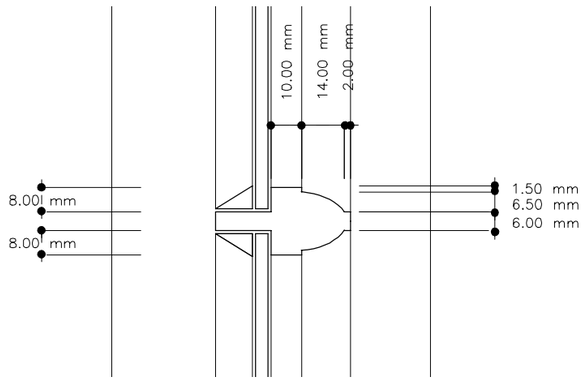

Detail 2 - Scale 1:2

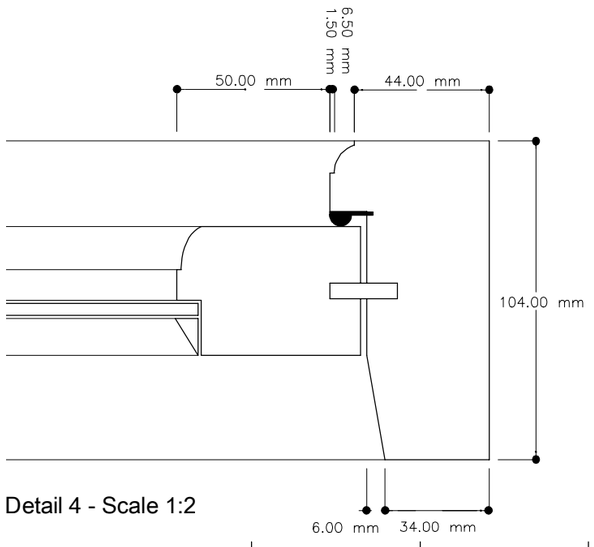

Detail 4 - Scale 1:2

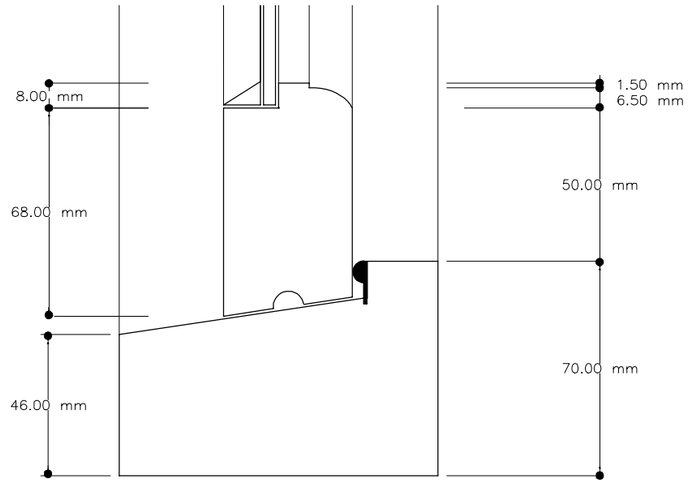

Detail 3 - Scale 1:2

Rev	Date	Drawn	Description
-	-	-	-

ctd architects

Clerk Bank House
Clerk Bank
LEEK
Staffordshire
ST13 5HE

t : 01538 373477
f : 01538 386503
e : info@ctdarchitects.co.uk
w : www.ctdarchitects.co.uk

ctd architects © 2016

- This drawing is copyright.
- All dimensions to be checked on site before proceeding.
- Contractor must notify the architect of any discrepancies before proceeding.
- Contractor to check/adjust dimensions of new work to suit existing conditions. Do not assume existing structure or details are plumb, square or level.
- All drawings to be read in conjunction with all other consultants drawings and specs.

Client

Mr Armett

Project
Replacement First & Second Floor Windows
3 Clerk Bank, Leek

Title
New casement window
'as proposed'

Scale	Size	Drawn	Chk'd	Date
1:10	A3	AM	CH	27/06/16

Status: LISTED BUILDING CONSENT

Job No.	Drawing No.	Rev.
16XX	AL04	-