See Important Notes on 373/94.2/2

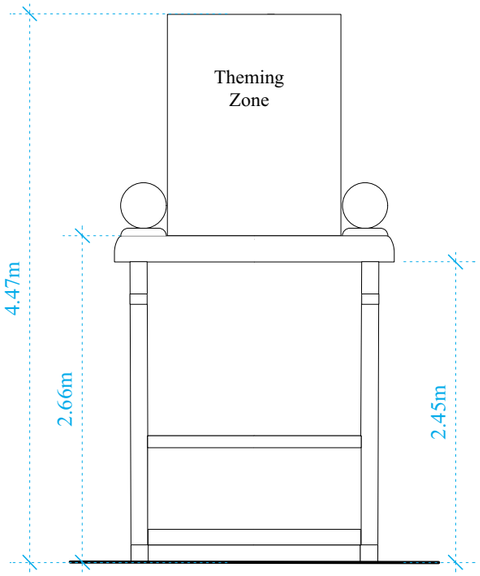

West Elevation

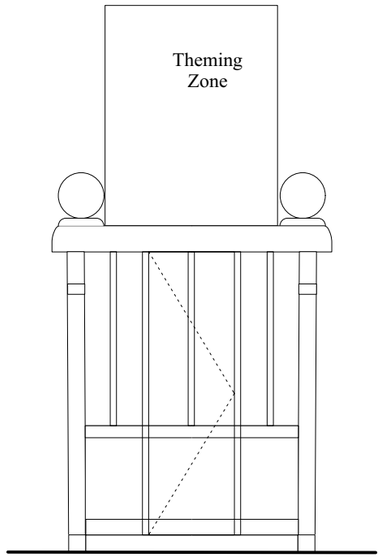

South Elevation

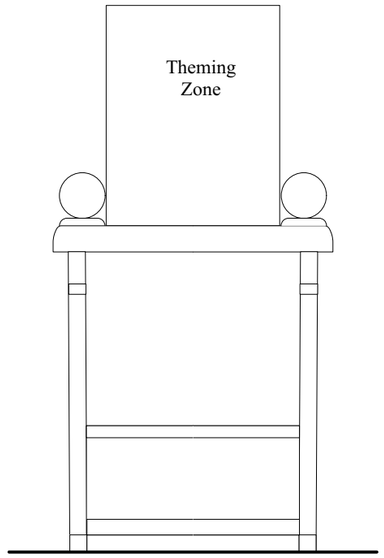

East Elevation

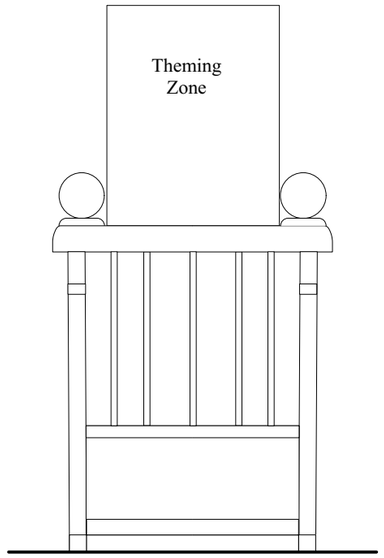

North Elevation

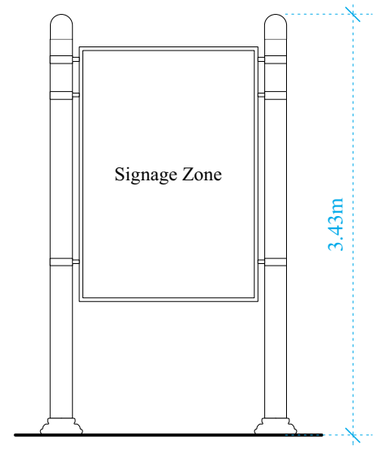

Front & Back Elevations

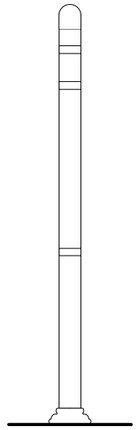

Side Elevations

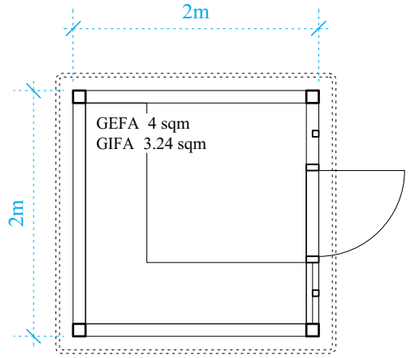

Floor Plan

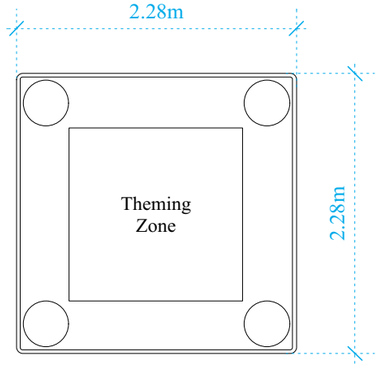

Roof Plan

Operator's Booth

Materials
Painted steel with thematic details.
All to be approved.

0 5 m

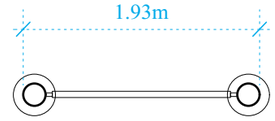

Plan

Ride Signs (4no)

Materials
Painted steel with thematic details.
All to be approved.

NICHOLS BROWN WEBBER
ARCHITECTS AND LANDSCAPE PLANNERS

POND HOUSE, NORTHEND, HENLEY-ON-THAMES, OXON RG9 6LG
TEL: TURVILLE HEATH (01491 638 536), FAX (01491 638 228)

PROJECT
Alton Towers Resort/ Cbeebies Extension

DRAWING TITLE
Operator's Booth & Signs Plans & Elevations

PLOT DATE	CHECKED
13.6.16	
SCALE	STATUS
1/50 @ A3	
PROJECT NO	DRAWING NO / REVISION
373/94.2	8

email: enquiries@nbwarchitects.co.uk