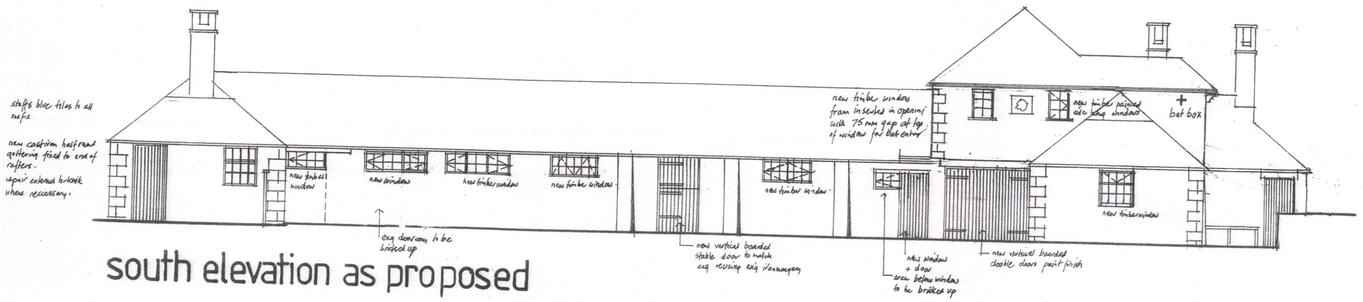

south elevation as proposed

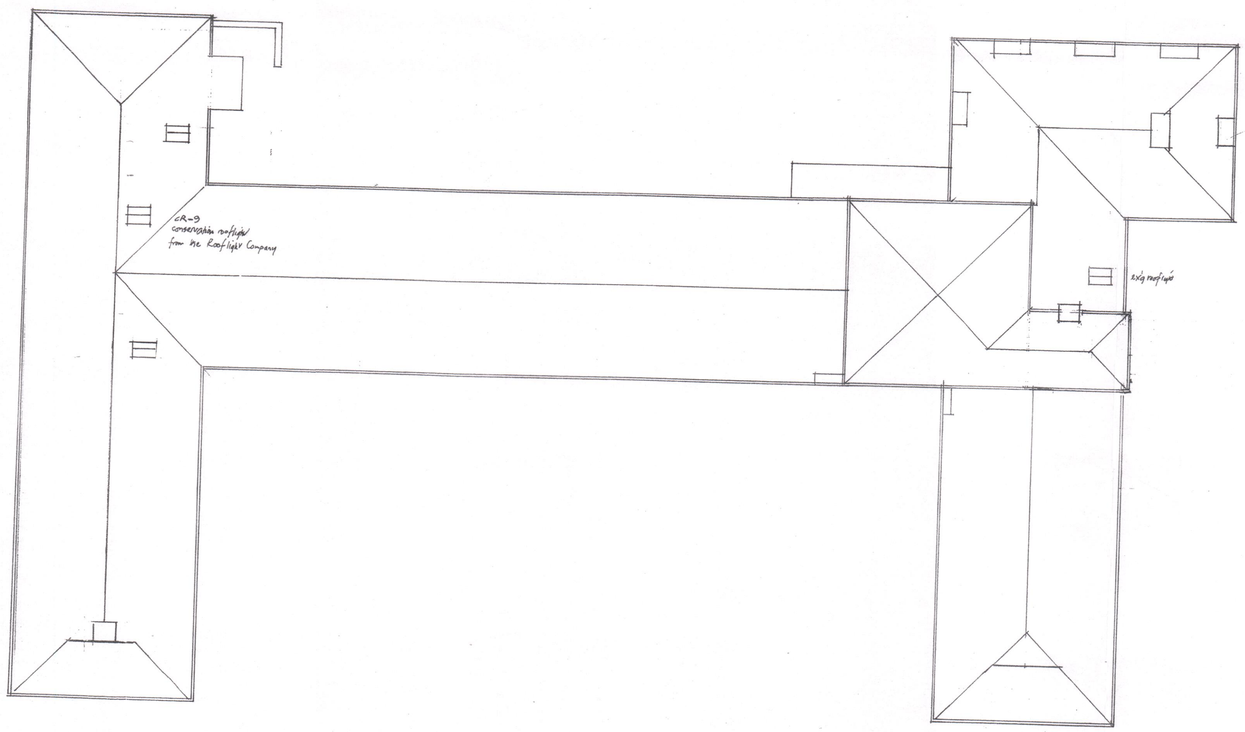

roof plan as proposed

Notes:-
All dimensions must be checked on site and not scaled from this drawing.
© This drawing is copyright and must not be copied without the express approval of the author.

No.	Date	Revisions
A	13·8·2014	FIRST FLOOR AREAS OMITTED MITIGATION MEASURES SHOWN ON DRAWING.

Client
MR J M HADFIELD

Job Title
HOME FARM
SHARPECLIFFE
Nr LEEK STAFFS
conversion of an agricultural building into three dwellings

Scale 1·100

Date NOV 2013

ARCHITECTS Y2K LIMITED
ALDERN HOUSE
BASLOW ROAD
BAKEWELL
DERBYSHIRE
DE45 1AE
TEL: 01629 810157

Drg. No. BM 1593·4
Rev. A

E Wright 534874