

south elevation as existing

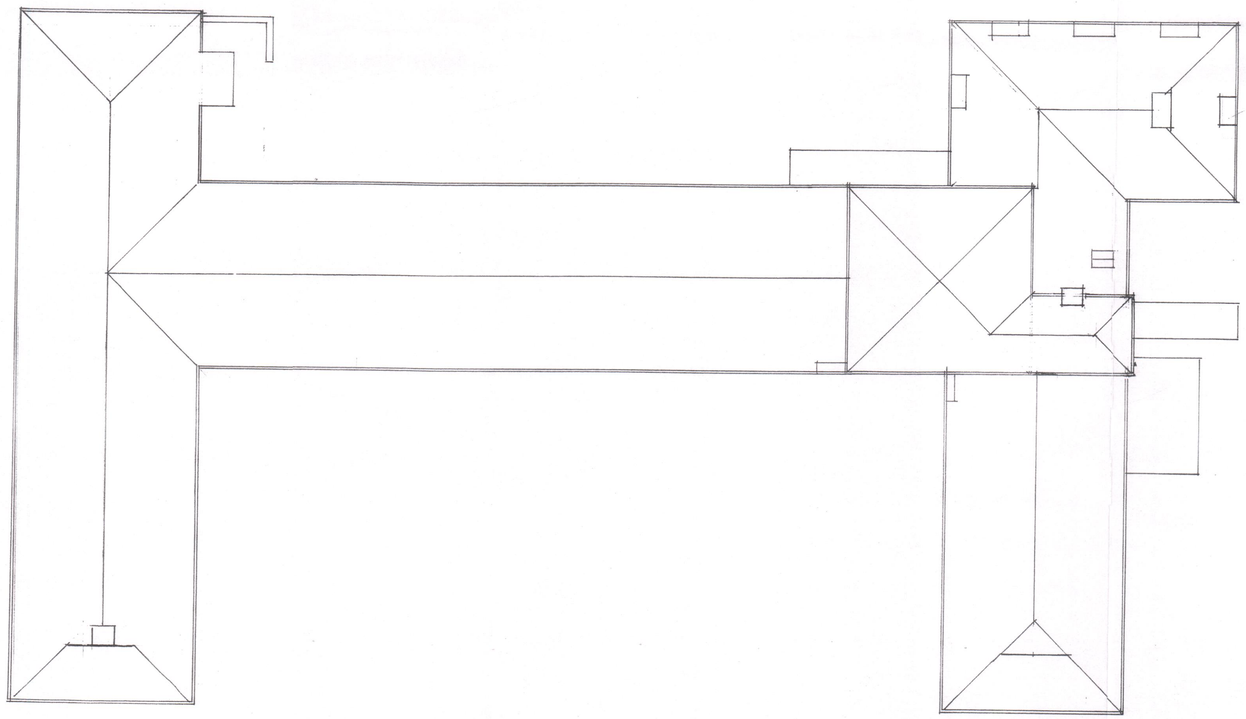

roof plan as existing

John E Wright 534874

Notes:-
All dimensions must be checked on site and not scaled from this drawing.
© This drawing is copyright and must not be copied without the express approval of the author.

No.	Date	Revisions

Client

MR J M HADFIELD

Job Title

HOME FARM
SHARPECLIFFE
Nr LEEK STAFFS
survey

Scale 1:100

Date NOV 2013

ARCHITECTS Y2K LIMITED
ALDERN HOUSE
BASLOW ROAD
BAKEWELL
DERBYSHIRE
DE45 1AE
TEL: 01629 810157

Drg. No. 1593-2

Rev.