Frame Section One fixed light / One opening light

Drawing 2. casement sections as per drawing No 1

Jamb

Mullion

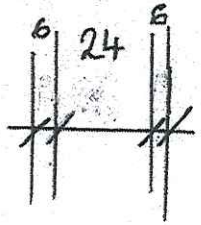

Jamb

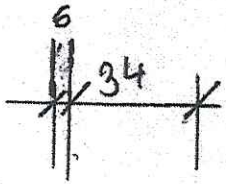

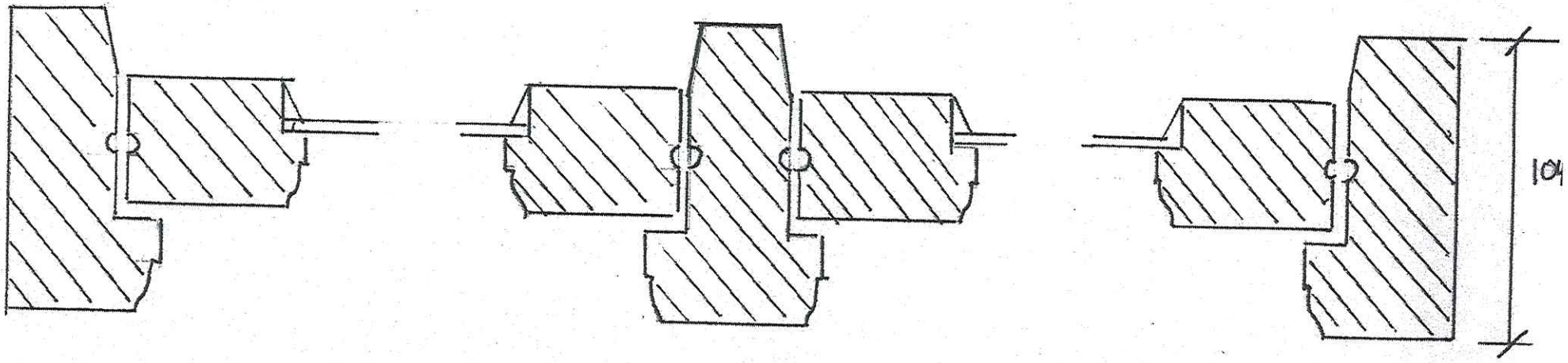

Scale 1:2