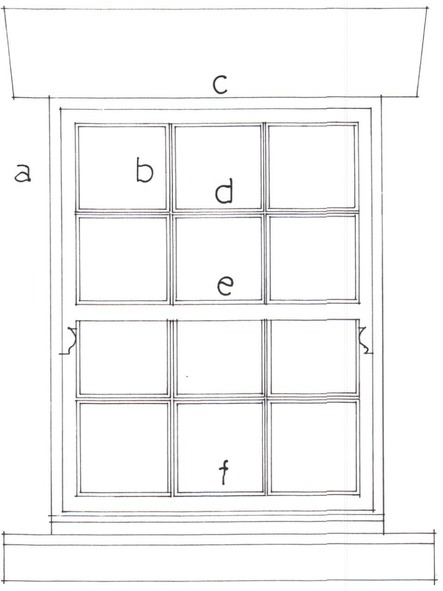

5 No thus. 13, 14, 15, 16, 21.

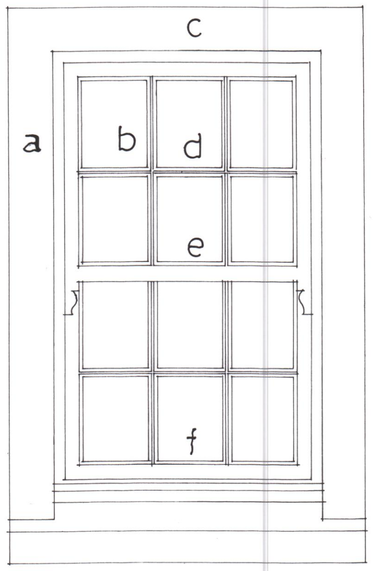

16 no thus. 1, 2, 3, 4, 5, 6, 7, 8, 9, 10, 11, 12, 17, 18, 19, 20.

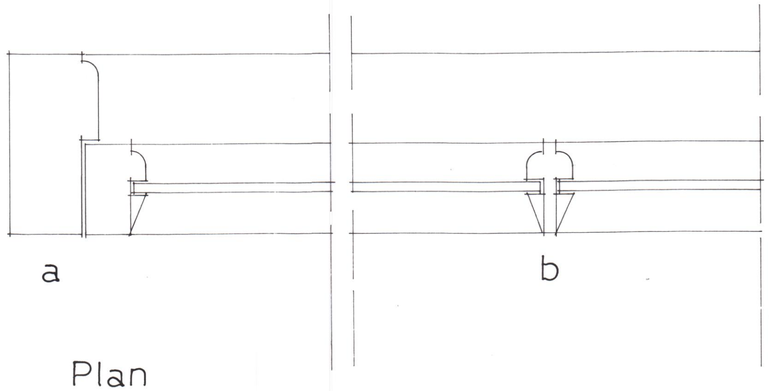

Plan

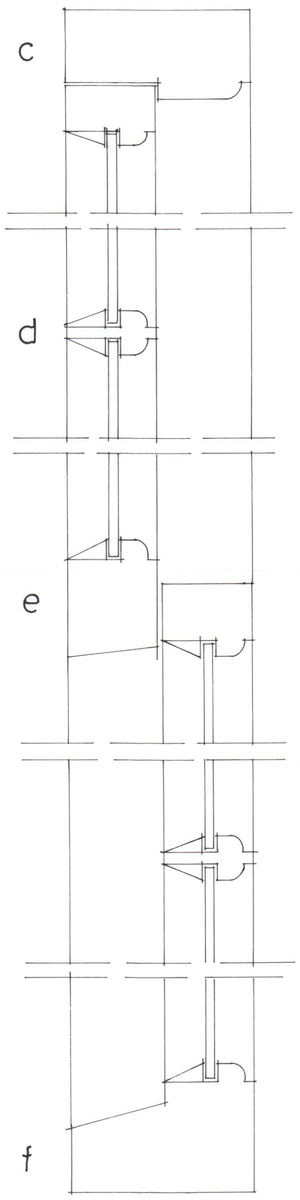

Section.

NOTES

Remove all windows as noted on drawings, prepare for replacement, make good all existing finishes to new frames.

New windows to be softwood sliding sash, double-glazed externally with 4mm Extraclear Float Glass coated with ClimaGuard A 1.1, 6mm gap filled with 90% Krypton, and internally with 4mm ExtraClear Float Glass. Windows to have beaded glazing as shown in individual panes. They are to be without a drip mould on the cills and any trickle vents to be integral within frames. All new frames to be pointed externally in coloured mastic, and internally with silicone sealant

Paint all new woodwork on completion with priming coat, two coats of undercoat and one coat of gloss.

Site to be left clean and tidy on completion and any damage to adjoining areas to be made good. All works to be carried out in strict accordance with all relevant BS Codes of Practice, good building practice and all relevant Health & Safety Legislation. All dimensions and levels to be checked on site.

MR. & MRS. P. MARTIN

DATE **May 16**

PROPOSED REPLACEMENT WINDOWS
AT
THE EAVES,
EAVES LANE,
CHEADLE,
STOKE-ON-TRENT,
STAFFS. ST10 2AG

SCALES:
ELEVATIONS 1:10
SECTIONS 1:2

DRAWN BY
MALCOLM SALES
QUANTITY SURVEYORS, DESIGNERS & BUILDING COST CONSULTANTS
CHURCHILL SUITE,
LULWORTH HOUSE,
51, HIGH STREET,
CHEADLE, STOKE-ON-TRENT,
STAFFS. ST10 1AR
TEL: 01538 757233
MOB: 07889 225437
E-MAIL Malcolm.Sales@salesqs.co.uk

AS EXISTING

FOR APPLICATION FOR
LISTED BUILDING CONSENT

DRAWING NR. 1509/11/01