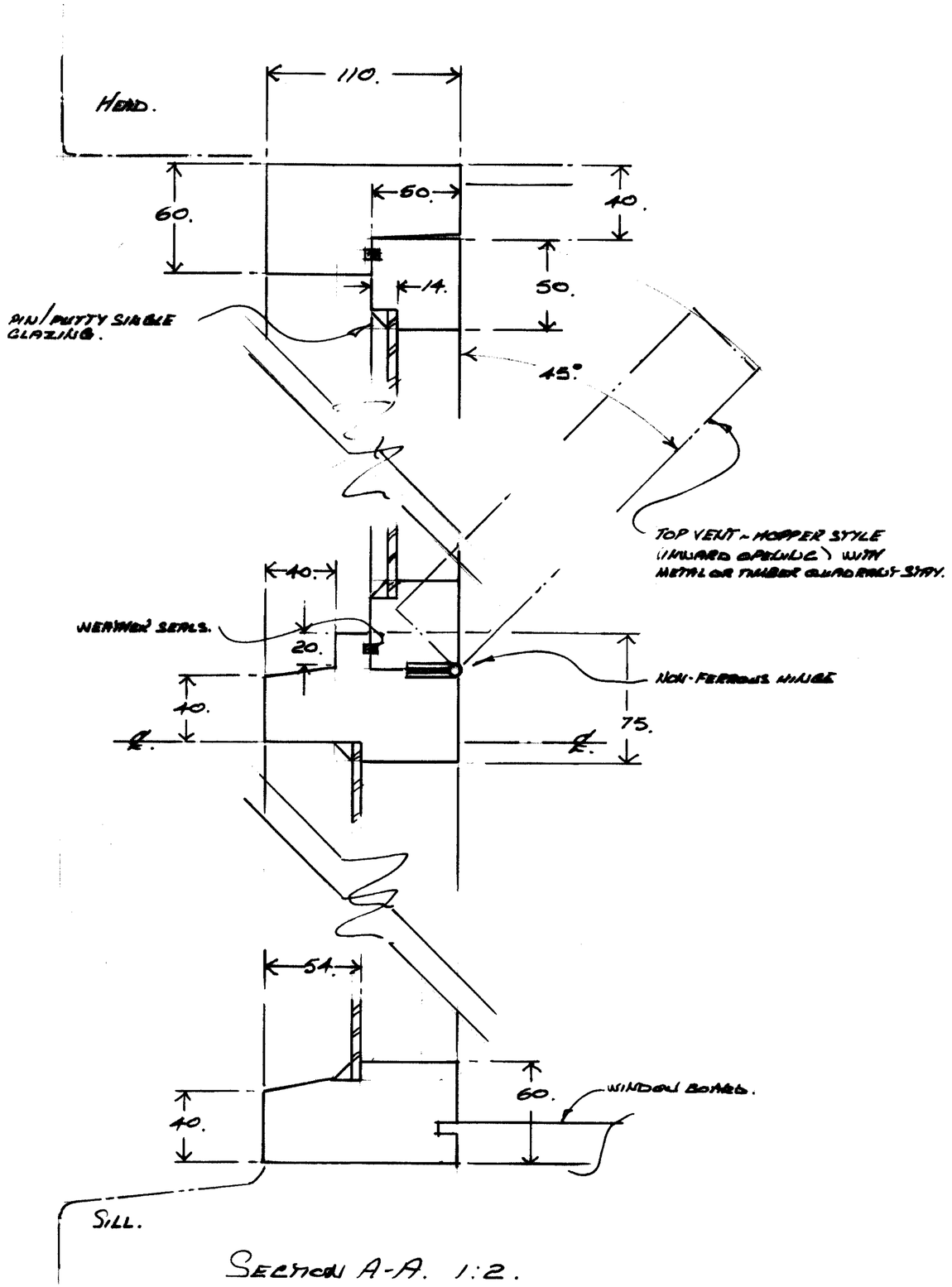

SECTION A-A. 1:2.

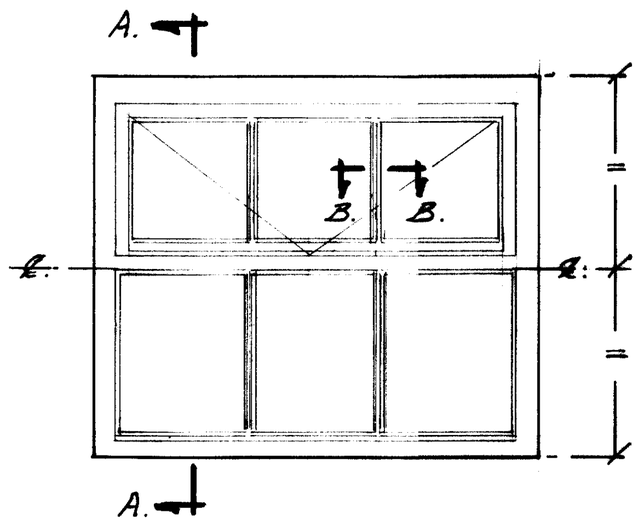

(EXAMPLE) - WEST ELEVN G.F. BEDROOM
1040 WIDE x 875 HIGH REVEAL. 1:10.

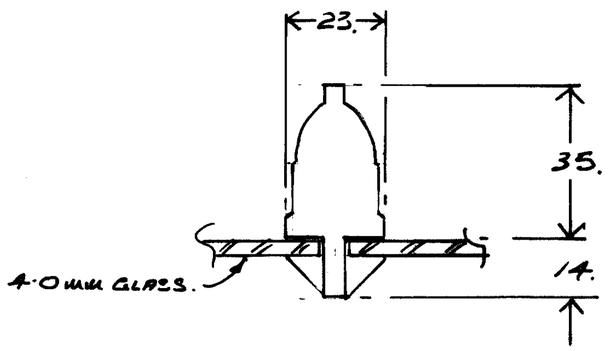

SECTION B-B. 1:1.

09/01189
14 DEC 2009

DRG N° 0774-W.

HOPPER STYLE REPLACEMENT WINDOW PATTERN.

HAY HOUSE FM - BARN/KENNELS.